FAS Picosol 10 mm

Direct acting solenoid valve
Sub-base mounted
2/2, 3/2 NC

Very Compact design

High flow rate

Low power consumption

High cycling rate – 1800 c.p.m. maximum

Long life – in excess of 100 million cycles*

* Except Hit & Hold valves

2/2 types with 1,6 mm orifice	25 million cycles
3/2 types with 1,1 or 1,3 mm orfice	50 million cycles

Surge supression and LED indication*

* Hit and hold surge supression only

Technical data

Medium:
Compressed air, filtered to 40µm, lubricated or non-lubricated; neutral fluids or gases (other mediums: contact technical)

Operation:
Poppet valve, directly actuated with spring return

Operating pressure:
0 ... 8 bar
(see page 2 for details)

Mounting:
Through holes, M1,6 or M2 threaded

Flow	Orifice	kv
12 ... 32 l/min.	0.5 ... 1,6 mm	0,19 ... 0,50

Response time pneumatic:
15ms

Ambient temperature:
-10°C to +50°C

Fluid temperature:
-10°C to +30°C
(consult our Technical Service for use below +2°C)

Weight:
0,01 kg

Materials

(in contact with medium)
Body: PPS
Operator: AISI 302 and 430FR, PA 6/6
Elastomers: NBR

Alternative options on request

Function, Pressure range
Vacuum, Coil orientation
Material, Manual override
Voltage, Electrical connector
Power, High speed valve

Sub-base options
refer to data sheet N/UK 5.4.118.00

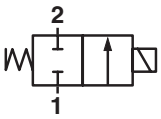

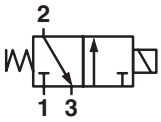

Our policy is one of continued research and development. We therefore reserve the right to amend, without notice, the specifications given in this document.

Standard models
2/2 valves

Symbol	Function	Orifice (mm)	Flow l/min	kv	Operating pressure (bar)	Manual override	Hit & hold	Model Ordering number	Voltage	Power (W)	Drawing no.
	2/2 NC	0,8	13	0,2	0 ... 8	None	No	11-211P601-H0+1341+AYR	24 V d.c.	1,2 W	1
	2/2 NC	1,2	25	0,39	0 ... 4	None	No	11-211P602-H0+1341+AYR	24 V d.c.	1,2 W	1
	2/2 NC*	1,6	32	0,50	0 ... 8	None	Yes	11-211P603-H0+6311+AZU	24 V d.c.	4W/0,4 W	1

Note:
Electrical connection: for MOLEX® connector
* Hit and hold

3/2 valves

Symbol	Function	Orifice (mm)	Flow l/min	kv	Operating pressure (bar)	Manual override	Hit & hold	Model Ordering number	Voltage	Power (W)	Drawing no.
	3/2 NC	0,8	12	0,19	2 ... 8	Push only	No	11-311PI01-H0+1141+AYR	24 V d.c.	1,2 W	2
	3/2 NC*	1,1	25	0,38	2 ... 8	Push only	Yes	11-311PI011H0+6111+AZR	24 V d.c.	3W/0,3 W	2
	3/2 NC*	1,3	32	0,50	2 ... 6,5	Push only	Yes	11-311PI013H0+6111+AZR	24 V d.c.	3W/0,3 W	2

Note:
Electrical connection: for MOLEX® connector
* Hit and hold

Electrical details

Voltage tolerance:	±10%
Rating:	100% E.D.
Electrical insulation:	1000 V a.c.
Protection class	IP 51 with connector
Insulation class:	F155°C

Accessories

Electrical connection

V11556-E03	0,3 m
V11556-E10	1,0 m
V11556-E15	1,5 m

Our policy is one of continued research and development. We therefore reserve the right to amend, without notice, the specifications given in this document.

2/2 NC models for MOLEX® connector

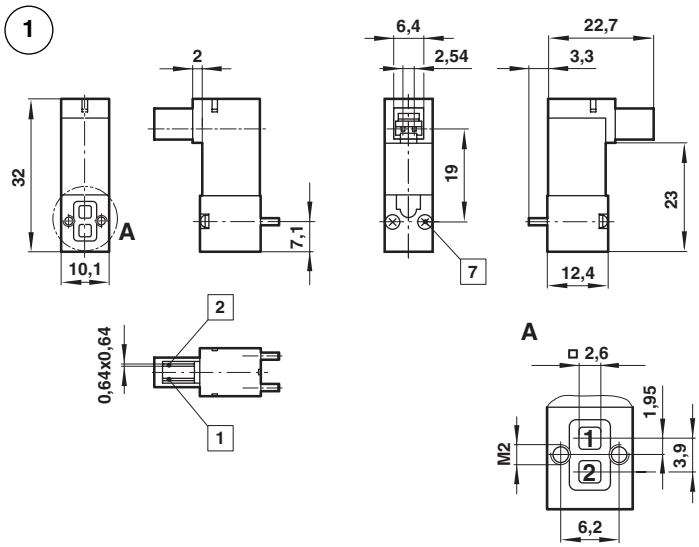

3/2 NC models for MOLEX® connector

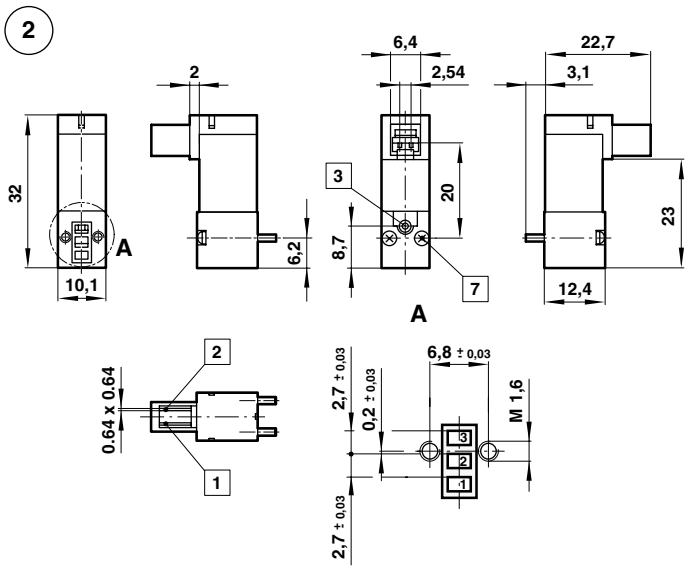

1	**Pin +**
2	**Pin -**
3	**Manual override**
7	**The recommended mounting screw tightening torque is 0,15 nm All solenoids are supplied with mounting screws and gasket**

Warning for Hit & Hold valves: damage could be caused to the valve if wired incorrectly.

Electrical connection

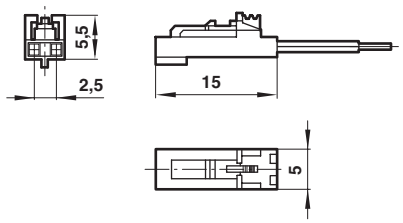

Warning

These products are intended for use in industrial compressed air systems only. Do not use these products where pressures and temperatures can exceed those listed under '**Technical Data'.**

Before using these products with fluids other than those specified, for non-industrial applications, life-support systems, or other applications not within published specifications, consult FAS.

Through misuse, age, or malfunction, components used in fluid power systems can fail in various modes.

The system designer is warned to consider the failure modes of all component parts used in fluid power systems and to provide adequate safeguards to prevent personal injury or damage to equipment in the event of such failure.

System designers must provide a warning to end users in the system instructional manual if protection against a failure mode cannot be adequately provided.

System designers and end users are cautioned to review specific warnings found in instruction sheets packed and shipped with these products.

Our policy is one of continued research and development. We therefore reserve the right to amend, without notice, the specifications given in this document.