MICROSOL 15 MM

Microsol & Microsol Interface 15 mm 2/2 & 3/2 - way valves

- Very compact design
- High flow rate
- For lubricated and unlubricated compressed air, neutral liquids or gases
- High cycle rate of up to 2000 cycles per minute
- Long life - in excess of 100 million cycles*

* Hit & Hold valves: 10 million cycles

- Flange mounted

TECHNICAL DATA

Solenoid valve for air, and neutral liquids or gases

Operation:
Microsol: Poppet valve, directly actuated with spring return
Microsol interface: pilot operated poppet valve, servo assisted

Switching function:
Normally closed and normally open

Response time:
8 - 10 ms

Operating pressure:
0 - 10 bar

Fluid temperature:
-10°C ... +30°C

Ambient temperature:
-10°C ... +50°C

Mounting position:
As required

MATERIALS

Body: for 2/2 valves PPS, for 3/2 valves PPS, PA, Stainless steel
Seat seal: NBR
Internal parts: Stainless steel, PA 6/6

Actuation	Function	Port	Orifice mm	Flow l/min	Operating pressure bar	Manual override	Hit & Hold*	Voltage	Power (W)	Drawing no.	MODELS
2/2 Direct acting valves											
	NC	Flange	1,1	48	0 - 10	No	No	24V DC	2,0	1	**01-211P202-H0+63111+AYZ**
	NO	Flange	1,1	48	0 - 10	No	No	24V DC	2,0	2	**01-221P202-H0+631A1+AYZ**
3/2 Direct acting valves											
	NC	Flange	1,1	27	0 - 10	Push only	No	24V DC	2,0	4	**01-311P1011H0+61111+AYZ**
	NO	Flange	1,1	27	0 - 6	No	No	24V DC	2,0	4	**01-321P1011H0+631A1+AYZ**

* PWM energy saving option
Standard conformity: IINERIS 00ATEX0031 X

For further information

i PDF CAD

www.norgren.com/info/en3-166

Symbol	Function	Port	Orifice mm	Flow l/min	Operating pressure bar	Manual override	Hit & hold*	Voltage	Power (W)	Drawing no.	MODELS
2/2 Direct acting valves / high flow models											
	NC	Flange	3,6	194	0 - 6	No	Yes	24V DC	12 / 0,5	3	**01-211P-036H0+63111+AZN**
3/2 Interface valves / high flow models											
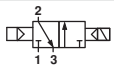	NC	Flange	3,0	194	1,5 - 10	Push only	No	24V DC	1,0	6	**01-312E-06-HP+A1171+AYV**
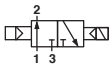	NO	Flange	3,0	194	1,5 - 10	No	No	24V DC	2,0	6	**01-322E-06-HP+C31G1+AYZ**
3/2 Direct acting valves / intrinsically safe (IS) models* **											
	NC	Flange	0,5	8	0 - 7	Push only	No	12V AC/DC	0,55	5	**01-311P-00-H0+F01003+BCC**
	NC	Flange	0,5	8	0 - 7	Push only	No	24V AC/DC	0,7	5	**01-311P-00-H0+F01003+BDH**
	NC	Flange	0,5	8	4 - 7	Push only	No	12V DC	0,1	5	**01-311P-00-H0+H01014+AWD**
	NC	Flange	0,5	8	4 - 7	Push only	No	24V DC	0,1	5	**01-311P-00-H0+H01016+AYG**
3/2 Direct acting valves / other options as used on M54 range**											
	NC	Flange	0,8	18	0 - 10	Push only	No	12V DC	1,5	4	**01-311P101-H0+61511i+AWM**
	NC	Flange	0,8	18	0 - 10	Push only	No	24V DC	1,5	4	**01-311P101-H0+61511i+AYS**
	NC	Flange	0,8	18	0 - 10	Push only	No	24V AC	1	4	**01-311P101-H0+11511i+AXX**
	NC	Flange	0,8	18	0 - 10	Push only	No	48V AC	1	4	**01-311P101-H0+11511i+BAU**
	NC	Flange	0,8	18	0 - 10	Push only	No	110V AC	1	4	**01-311P101-H0+11511i+BBJ**
	NC	Flange	0,8	18	0 - 10	Push only	No	220V AC	1	4	**01-311P101-H0+11511i+BCK**

* PWM energy saving option. ***Standard conformity: IINERIS 00ATEX0031 X

ACCESSORIES

Electrical connector

Single connector	**M/P43082**
Single connector LED+VDR 24V	**M/P43086**
Single connector LED+VDR 110V	**M/P43148**
Single connector LED+VDR 220V	**M/P43087**
Single connector and 1 m flying lead	**M/P43066**

ELECTRICAL DETAILS

Voltage tolerance	-10 % / +15 %
Rating	100% E.D.
Electrical insulation	1500V AC
Insulation class	F (155°C)

MICROSOL 15 MM

Microsol 15 mm 2/2 & 3/2 - way valves

DIMENSIONS

Index	Description
1	Wire (red) / pin +
2	Wire (black) / pin –
3	Manual override
4	For NC models
5	For NO models
6	Mounting pattern
7	The recommended mounting screw tightening torque is 0,6 Nm.

All solenoids are supplied with mounting screws and gasket.

Warning for Hit and Hold valves: damage could be caused to the valve if wired incorrectly.

1

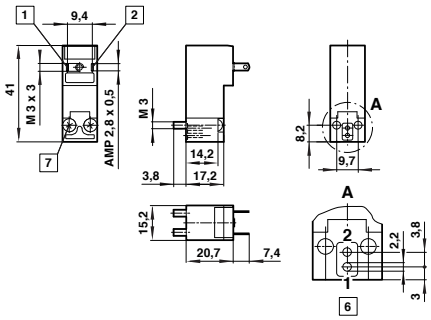

2

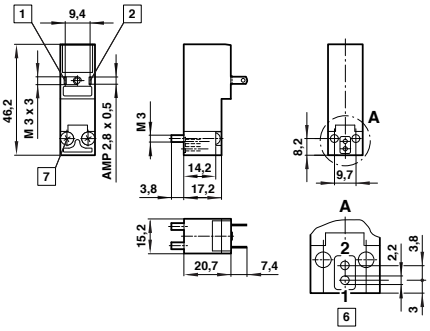

4

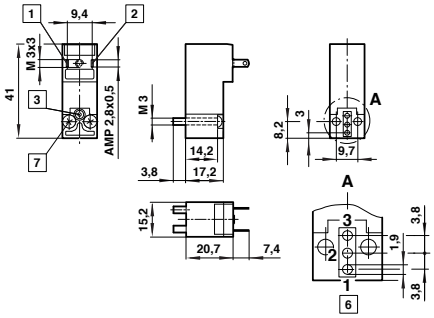

3

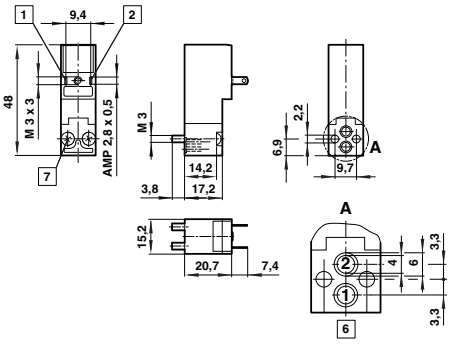

⑤

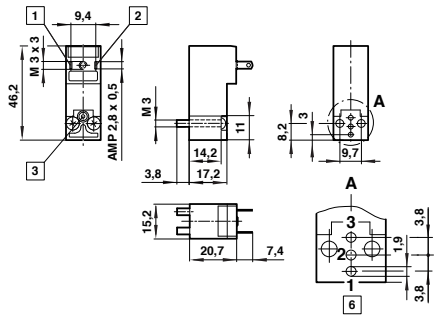

⑥

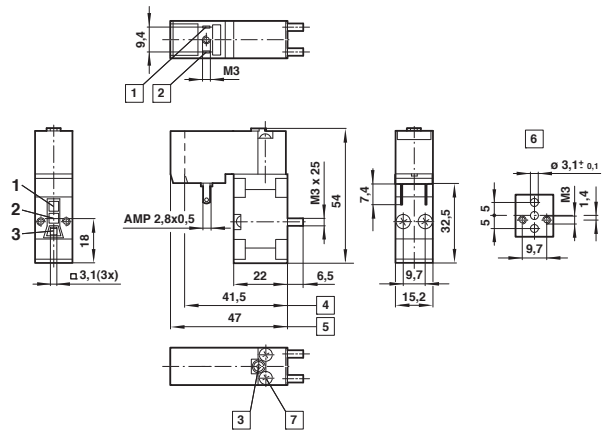
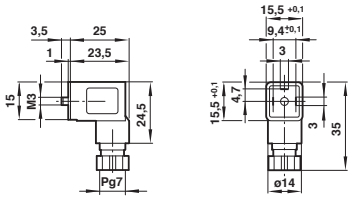
Electrical connector*