M/44000/M

LINTRA® Rodless cylinders
Magnetic piston
Double acting
Ø 25 to 40 mm

New compact, space-saving design

Proven sealing system

Integral switch mounting

Adjustable cushioning

Magentic piston as standard

Technical data

Medium:
Compressed air, filtered, lubricated or non-lubricated

Operation:
Double acting, magnetic piston

Operating pressure:
1 to 8 bar

Operating temperature:
-30°C to +80°C max. (Consult our Technical Service for use below +2°C)

Cylinder diameters:
25, 32, 40 mm

Strokes:
5000 mm or 196 inches max.
Longer strokes on request

Materials

Barrel: Anodised aluminium alloy
End covers: Aluminium alloy
Yoke: Anodised aluminium alloy
Cover and Pistons: Plastic
Sealing strip: Polyurethane
Cover strip: Polyamide
Seals: Nitrile rubber & polyurethane

Ordering examples

See page 2

Mountings and switches

See page 2

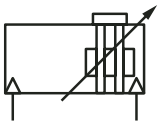

Options selector

★/440★★/M/★★★★

Porting	Substitute
ISO G-thread	M
NPT-thread	C

Guiding system	Substitute
Internal	0

Cylinder diameters (mm)	Substitute
25	025
32	032
40	040

Note: When specifying NPT ports the stroke should be given in inches

Stroke length in mm for ISO G-thread
5000 max.

★★★

Stroke length in full inches for NPT-thread
196 max.

★

Fractional increments of stroke (inches)					
Substitute		Substitute		Substitute	
0	A	3/8	G	3/4	P
1/16	B	7/16	H	13/16	R
1/8	C	1/2	J	7/8	S
3/16	D	9/16	K	15/16	T
1/4	E	5/8	M	Special	X
5/16	F	11/16	N		

Switches

Cable

Plug (M8x1)

Model Reed	Solid state	Voltage V a.c.	V d.c.	Current max.	Temperature °C	LED	Features	Cable-/ Plug length	Cable type	Straight cable Connection	90°	Data sheet
M/50/LSU/*V	–	10 ... 240	10 ... 170	180 mA	-20° ... +80°	●	–	2, 5, 10 m	PVC 2 x 0,25	–	–	N/D 4.3.005
M/50/LSU/5U	–	10 ... 240	10 ... 170	180 mA	-20° ... +80°	●	–	5 m	PUR 2 x 0,25	–	–	N/D 4.3.005
TM/50/RAU/2S	–	10 ... 240	10 ... 170	180 mA	-20° ... +150°	–	–	2 m	Silicon 2 x 0,25	–	–	N/D 4.3.005
M/50/RAC/5V	–	10 ... 240	10 ... 170	180 mA	-20° ... +80°	–	Changeover	5 m	PVC 3 x 0,25	–	–	N/D 4.3.005
M/50/LSU/CP	–	10 ... 60	10 ... 75	180 mA	-20° ... +80°	●	Plug M8x1	5 m	PVC 3 x 0,25	M/P73001/5	–	N/D 4.3.005
–	M/50/EAP/*V	–	10 ... 30	150 mA	-20° ... +80°	●	PNP	2, 5, 10 m	PVC 3 x 0,25	–	–	N/D 4.3.007
–	M/50/EAP/CP	–	10 ... 30	150 mA	-20° ... +80°	●	PNP, plug M8x1	5 m	PVC 3 x 0,25	M/P73001/5	–	N/D 4.3.007
–	M/50/EAN/*V	–	10 ... 30	150 mA	-20° ... +80°	●	NPN	2, 5, 10 m	PVC 3 x 0,25	–	–	N/D 4.3.007
–	M/50/EAN/CP	–	10 ... 30	150 mA	-20° ... +80°	●	NPN, plug M8x1	5 m	PVC 3 x 0,25	M/P73001/5	–	N/D 4.3.007

* Please insert cable length

For details (technical informations, Cable materials, dimensions a.s.o.) see data sheets N/UK **4.3.**005 and N/UK **4.3.**007

Warning

These products are intended for use in industrial compressed air systems only. Do not use these products where pressures and temperatures can exceed those listed under '**Technical Data**'.

Before using these products with fluids other than those specified, for non-industrial applications, life-support systems, or other applications not within published specifications, consult NORGREN.

Through misuse, age, or malfunction, components used in fluid power systems can fail in various modes.

The system designer is warned to consider the failure modes of all component parts used in fluid power systems and to provide adequate safeguards to prevent personal injury or damage to equipment in the event of such failure.
System designers must provide a warning to end users in the system instructional manual if protection against a failure mode cannot be adequately provided.
System designers and end users are cautioned to review specific warnings found in instruction sheets packed and shipped with these products.

Mountings

Ø	Type C  Page 5	Type V  Page 5	Type S  Page 5	Switch mounting brackets 
25	QM/44025/21	Q44025AAAAAM332	Q44025AAAAAM337	M/P72487
32	QM/44032/21	Q44032AAAAAM332	Q44032AAAAAM337	M/P72487
40	QM/44040/21	Q44040AAAAAM332	Q44040AAAAAM337	M/P72487

Mountings and accessories materials

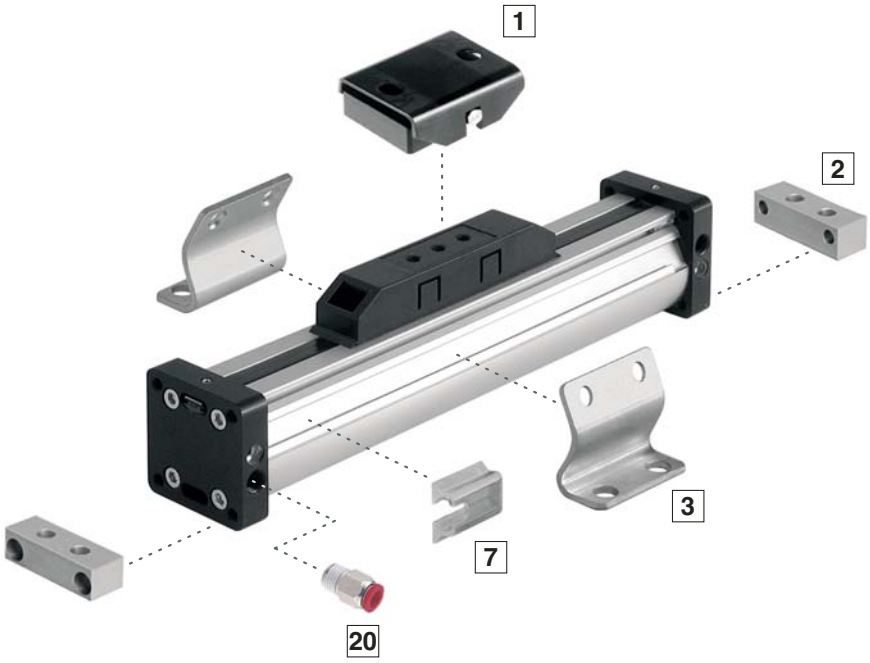

Item	Type	Description
1	S	Yoke: zinc plated steel Mounting support: anodised aluminium Screws: zinc plated steel Bolts: stainless steel
2	C	Anodised aluminium Screws: zinc plated steel
3	V	Zinc plated steel Screws: zinc plated steel

Item	Type	Description
7	Bracket	Plastic
20	Fitting	Body: PBT, O-Ringe, NBR Grab ring: stainless steel Release button: POM Data sheet: N/UK **9.1.**001

Ordering examples

Cylinder
LINTRA® Pneumatic cylinder Ø 25 mm with adjustable cushioning, Magnetic piston and a 800 mm stroke,
quote: **M/44025/M/800**

Mountings
To order a centre support mounting V for Ø 25 mm cylinder
quote: **Q44025AAAAAM337**

Switches
To order a reed switch with LED and 2 m cable length
quote: **M/50/LSU/2V**

Switch mounting bracket
To order a bracket for magnetically operated switches M/50; 25 mm bore cylinder
quote: **M/P72487**

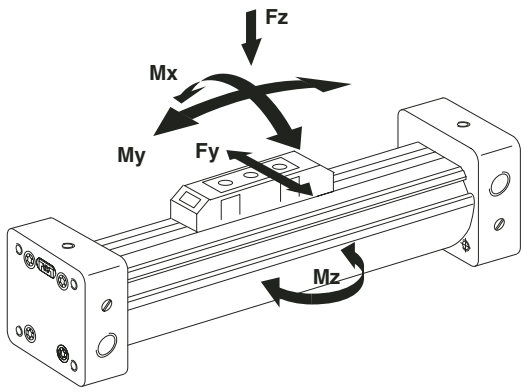

Loading values for LINTRA® Cylinders

The values given in the table below show the forces in the directions Fy and Fz and the maximum moments Mx, My and Mz. All values are applicable for speeds up to
0,2 m/s. A requirement for using these values is a smooth movement of the mass over
the whole stroke length of the cylinder. The reference point from
which the moments for all cylinders should be calculated is the centre line of the piston.

Total loads

When a LINTRA® Cylinder has to take several loads and moments, an additional calculation is necessary using the following formula:

$$\frac{Mx}{Mx\ max} + \frac{My}{My\ max} + \frac{Mz}{Mz\ max} + \frac{Fy}{Fy\ max} + \frac{Fz}{Fz\ max} \leqslant 1$$

Thrust, air consumption , cushion length, loading values

Ø	Theoretical forces (N) at 6 bar	Air consumption (l/cm) per stroke at 6 bar	Cushion length (mm)	Loading values (N) Fy	Fz (N)	Mx (Nm)	My (Nm)	Mz (Nm)
25	250	0,035	18	90	280	1	13	4
32	410	0,056	23	120	370	2	21	6
40	640	0,088	35	240	720	4	56	16

Loading values applicable to a speed of ⩽ 0,2 m/s. Maximum working life is normally reached below a speed of 1 m/s.

Cylinder deflection

Deflection due to external force.

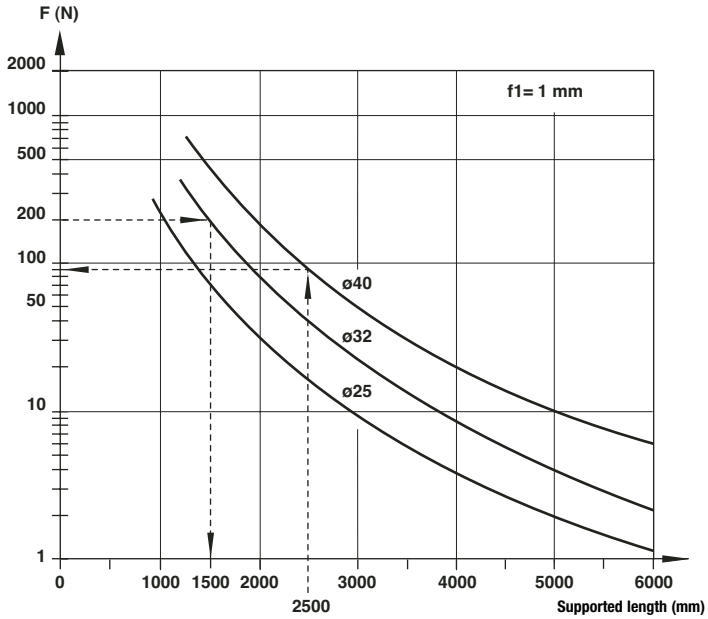

Cylinder Ø 32 mm, stroke length 3500 mm, external load 200 N
Maximum distance between supports = 1500 mm (see diagram).
Therefore additional support is required.

Deflection due to cylinder weight.

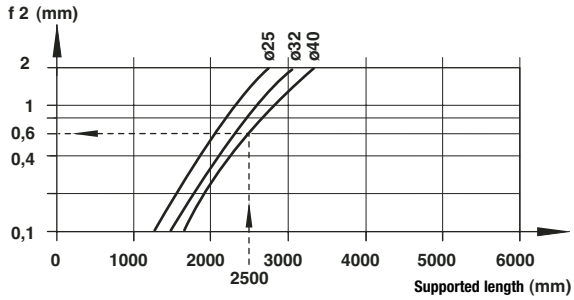

Cylinder Ø 40 mm, external force 120 N, distance between supports 2500 mm
Required: Total deflection
1. Deflection due to external force (f1):
   See diagram ➔ (1mm/90 N) · 120 N **1,3 mm**
2. Deflection due to cylinder weight (f2): See diagram ➔ **+0,6 mm**
   Total deflection: **1,9 mm**

Maximum permitted deflection:
f1 + f2 ⩽ 1 mm per 1000 mm stroke
Result:
1,9 mm are below the max. permitted deflection of 2,5 mm

Basic dimensions

M/44000/M/... — Standard Cylinders

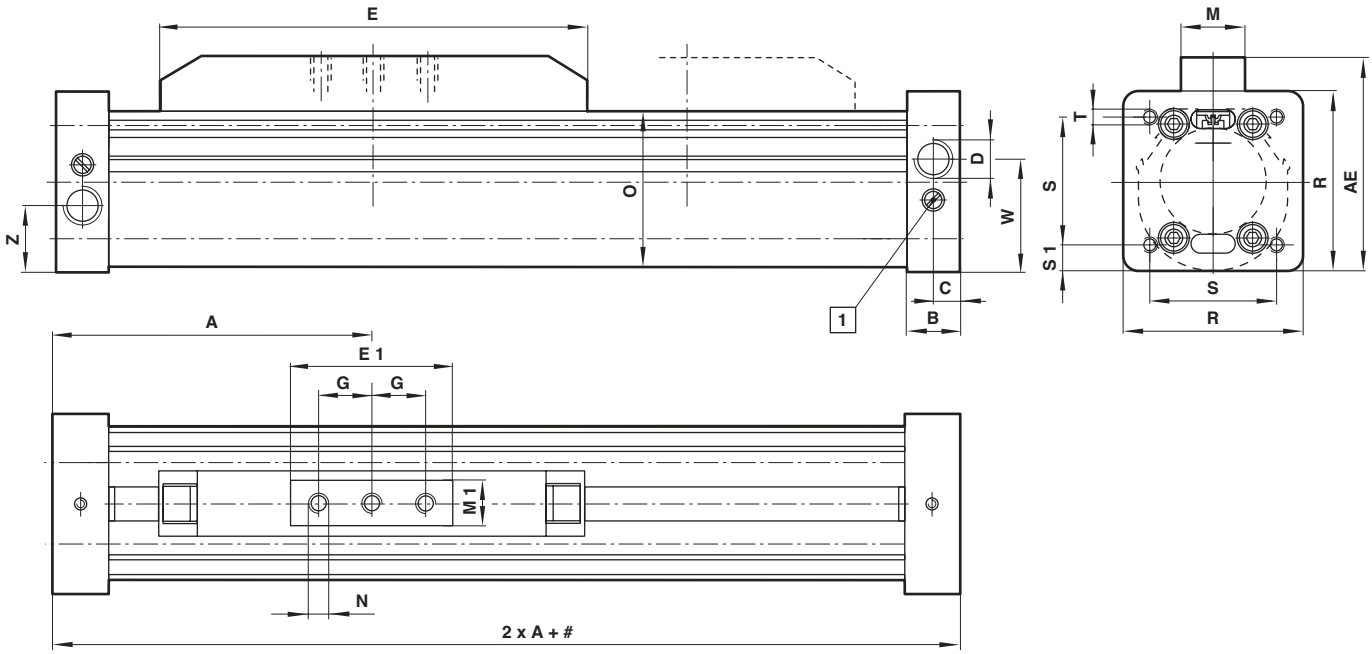

#	Stroke
1	Cushion screw

Ø	A	AE	B	C	D (Port threads)*		E	E1	G	M	M1
25	72,5	53,2	13,5	7	G 1/8	1/8 NPT	100	40	12,5	22	18
32	82,5	67,8	13,5	7	G 1/8	1/8 NPT	120	50	15	24	20
40	112,5	79,3	19	9,5	G 1/4	1/8 NPT	165	60	20	24	20
Ø	**N**	**O**	**R**	**S**	**S1**	**T**	**W**	**Z**	**kg at 0 mm**	**kg per 100 mm**	
25	M5-7 deep	35	42	33	4,5	M4-13,5	25,6	16,4	0,60	0,15	
32	M6-10 deep	46,5	53	41	6	M6-13,5	33,5	19,5	0,90	0,25	
40	M6-10 deep	58	65,5	48	8,75	M6-19	40,8	24,8	1,40	0,35	

* Optional ISO G or NPT-thread

Mountings

QM/44000/21 – Foot mounting type C

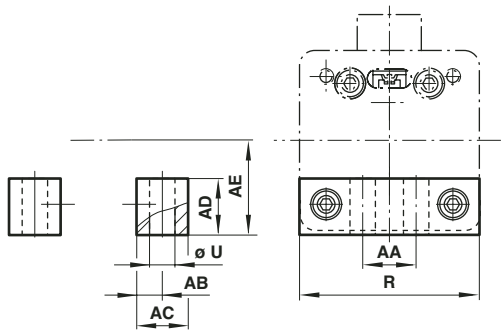

Type (C)	Ø	AA	AB	AC	AD	AE	R	Ø U	kg
QM/44025/21	25	18,5	5	10	10	21,5	42	5,5	0,04
QM/44032/21	32	20	8	16	16	28,5	53	9	0,09
QM/44025/21	40	27	7,5	15	22	35	65,5	9	0,13

Q44000AAAAAM332 – Centre support mounting type V

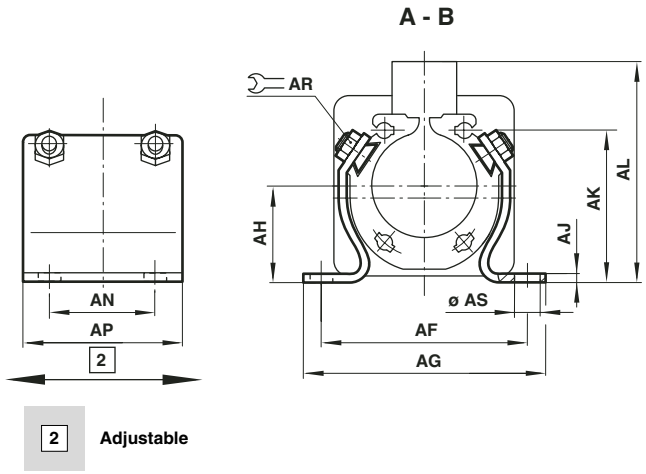

Type (V)	Ø	AF	AG	AH	AJ	AK	AL	AN	AP	AR	Ø AS	kg
QM44025AAAAAM337	25	58	70	21,5	3	31	53,5	25	25	10	6,6	0,07
QM44025AAAAAM337	32	70	83	28,5	3	43	70	30	50	10	9	0,15
QM44040AAAAAM337	40	79	92	35	3	55	81,5	40	60	10	9	0,25

QM44000AAAAAM337 – Swinging bridge mounting type S

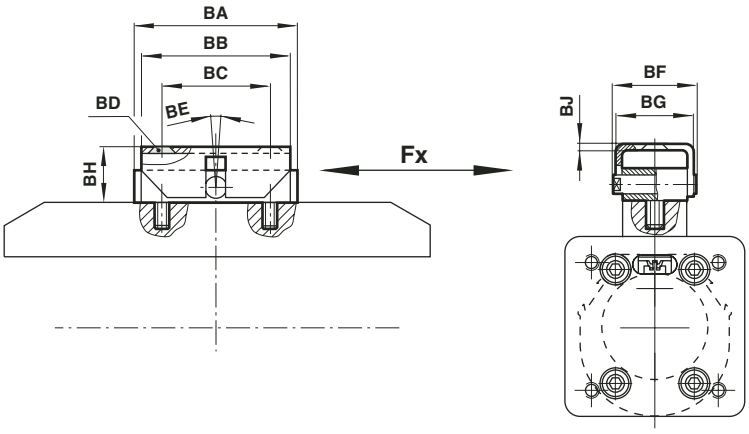

Type (S)	Ø	BA	BB	BC	BD (Din74)	BE	BF	BG	BH	BJ	Fx	kg
QM44025AAAAAM337	25	40	40	28	BM 5	± 8	29	28	15 +5	2	250 N	0,15
QM44032AAAAAM337	32	50	55	40	BM 6	± 8	31	30	17,5 + 5	2	410 N	0,20
QM44040AAAAAM337	40	60	55	40	BM 6	± 8	31	30	18 + 5	2	640 N	0,25

Spares

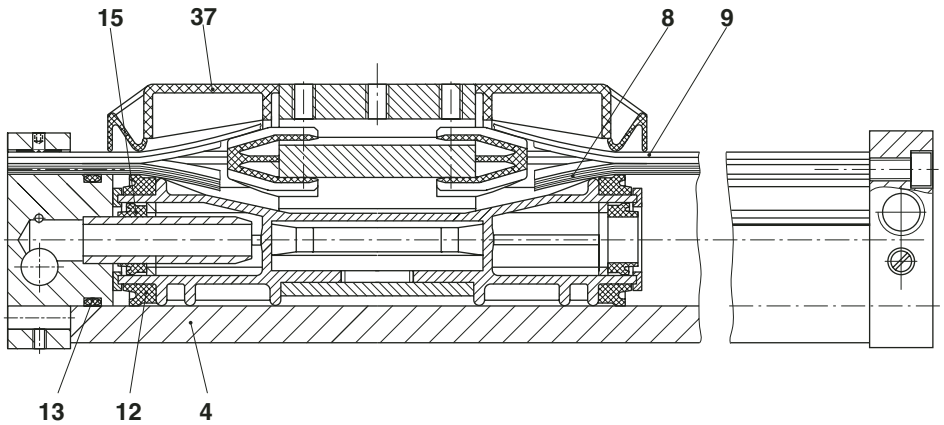

Ø	Model	Spares kit	Comprising Item	Description	Quantity	Seal strip Item 8	Cover strip Item 9	Barrel Item 4
25	M/44025/M	Q44025AACAAS788	8/9	Seal/cover strip	1/1	M/P 41628/*	M/P 41631/*	M/P 41933/*
32	M/44032/M	Q44032AACAAS788	12/15	Piston/cushion seal	2/2	M/P 41629/*	M/P 41632/*	M/P 41934/*
40	M/44040/M	Q44040AACAAS788	13	O-Ring	2	M/P 41630/*	M/P 41633/*	M/P 41935/*
			37	Cover	1			
				Grease	2			

* Insert stroke length
Note: Spares kits are common for all cylinder types
Please quote the cylinder type number when ordering spare parts

Warning

These products are intended for use in industrial compressed air systems only. Do not use these products where pressures and temperatures can exceed those listed under '**Technical Data**'.

Before using these products with fluids other than those specified, for non-industrial applications, life-support systems, or other applications not within published specifications, consult **NORGREN**.

Through misuse, age, or malfunction, components used in fluid power systems can fail in various modes.

The system designer is warned to consider the failure modes of all component parts used in fluid power systems and to provide adequate safeguards to prevent personal injury or damage to equipment in the event of such failure.

System designers must provide a warning to end users in the system instructional manual if protection against a failure mode cannot be adequately provided.

System designers and end users are cautioned to review specific warnings found in instruction sheets packed and shipped with these products.