97300 NAMUR
3/2 & 5/2 way spool valves
electromagnetic actuated, indirectly controlled
G 1/4, 1/4 NPT, NAMUR Interface

For single and double acting actuators

3/2 or 5/2 way function in one valve

Easily interchangeable solenoid

Crossover-free switching, switch-over function guaranteed even with small cross section air supply

Manual override with detent

Solenoids certified to ATEX, Ex ia and Ex m.

Solenoids approved to IEC Ex, FM etc available on request

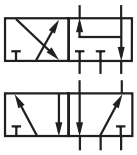

Approval depends on magnetic system, see page 2!

Technical features

Medium:
Filtered, lubricated or non-lubricated and dry compressed air

Operation:
Indirect solenoid operated spool valves

Operating pressure:
2 ... 8 bar (below -10°C must be > 2,5 bar)

Port size:
G1/4, 1/4 NPT
NAMUR Interface with integrated exhaust air

Flow direction:
Fixed

Mounting position:
Optional

Electrical connection:
See solenoid table

Fluid/Ambient temperature:
-15 ... +50°C
Depending on solenoid system
Air supply must be dry enough to avoid ice formation at temperatures below +2°C.

Materials:
Housing: Aluminium anodized
Pilot flange: Plastic (PBT)
Flange plate: Aluminium
Seals: NBR

Technical data
3/2 & 5/2 way indirect solenoid operated spool valves, standard design
(Conversion instructions of 5/2 into 3/2 way function see page 5)

Symbol	Port size 1	3, 5	2, 4	Actuation	Operating pressure (bar) *2)	Flow (l/min)	Weight (kg)	Dimension No.	Model *1)
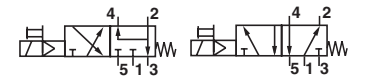	G 1/4	G 1/4	Flange	Solenoid/Spring	2 ... 8	1230	0,42	1	9730000
	1/4 NPT	1/4 NPT	Flange						9730010
	G 1/4	G 1/4	Flange	Solenoid/Solenoid	2 ... 8	1250	0,50	2	9731000
	1/4 NPT	1/4 NPT	Flange						9731010

*1) When ordering please indi ate solenoid, voltage and current type (frequency).
*2) Below -10°C must be > 2,5 bar

Option selector

973★0★0.★★★★.★★★.★★

Function	Substitute
5/2 way, spring return (3/2 way spare adaptor plate supplied)	0
5/2 way, solenoid return (3/2 way spare adaptor plate supplied)	1

Ports size	Substitute
G 1/4	0
1/4 NPT	1

Voltage	Substitute
24 V d.c.	024.00
230 V a.c.	230.50

Solenoid actuators	Substitute
see table	

Our policy is one of continued research and development. We therefore reserve the right to amend, without notice, the specifications given in this document. © 2013 Norgren GmbH

Solenoid operators

	Power consumption		Rated current		Ex-Protection	IP-Protection class (to EN 60529)	Temperature Ambient/Fluid	Electrical connection	Weight	Dimension	Circuit diagram	Model
	24 V d.c. (W)	230 V a.c. (VA)	24 V d.c. (m A)	230 V a.c. (m A)		Ex-Protection (ATEX-Category)	(°C)		(kg)	Nr.	Nr.	
	1,8	–	70	–	–	IP 65 (with connector)	-15 ... +50	Connector DIN EN 175301-803 Form B *6)	0,1	11	1	3050
	1,6	3,5	30	–	–	IP 65 (with connector)	-15 ... +50	Connector DIN EN 175301-803 Form A *6)	0,1	12	1	3036
	2	–	85	–	II3G II3D	Ex nA IIC T5 Gc Ex tc IIIC T95° Dc IP 65 (with connector)	-15 ... +50	With special connector DIN EN 175301-803 Form A	0,3	12	1	3046
	–	2,0	–	18	II3G II3D	Ex nA IIC T5 Gc Ex tc IIIC T95° Dc IP 65 (with connector)	-15 ... +50	With special connector DIN EN 175301-803 Form A	0,3	12	1	3047
	2,7	–	115	–	II2G II2D	Ex mb IIC T5 Gb Ex mb tb T95°C Db IP65 (with connector)	-20 ... +50	3 m cable	0,3	13	14	3062
	–	2,1	–	9	II2G II2D	Ex mb IIC T5 Gb Ex mb tb T95°C Db mit 3 m Kabel	-20 ... +50	3 m cable	0,3	13	15	3063
	2,7	–	115	–	–	IP 66 (with connector)	-10 ... +50	Connector M12x1, DIN IEC 61076-2-101 *6) Solenoid with yellow LED	0,1	14	17	3071

Standard voltages (±10%) 24 V d.c., 230 V a.c. Further versions on request.
*6) Connector is not scope of delivery, see table »Accessories«

Approvals

Model	Approvals ATEX	IECEx	FM	Datasheet
304x	PTB 06 ATEX 2055	–	–	N/de 7.1.555
306x	PTB 03 ATEX 2015	–	–	N/en 7.1.560
307x	EC-Declaration of Conformity	–	–	N/en 7.1.565

Our policy is one of continued research and development. We therefore reserve the right to amend, without notice, the specifications given in this document. © 2013 Norgren GmbH

Accessories

Connector DIN EN 175301-803	Connector M12 x 1	M12 x 1
0570275, form A	0523055 (without cable)	0523056 (90°, without cable)
0680003, form B	0523057 (2 m cable)	0523058 (90°, 2 m cable)
	0523052 (5 m cable)	0523053 (90°, 5 m cable)

Silencer	Throttle control plate	Flange plate	Yoke
Page 6	Page 6	Page 5 & 6	Page 6
C/S2 1/4 NPT	4040239	0612790 (NAMUR single connection plate)	0540593
M/S2 G 1/4		0612791 (NAMUR-rip use in combination with 0612790)	

Dimensions

Valves

1

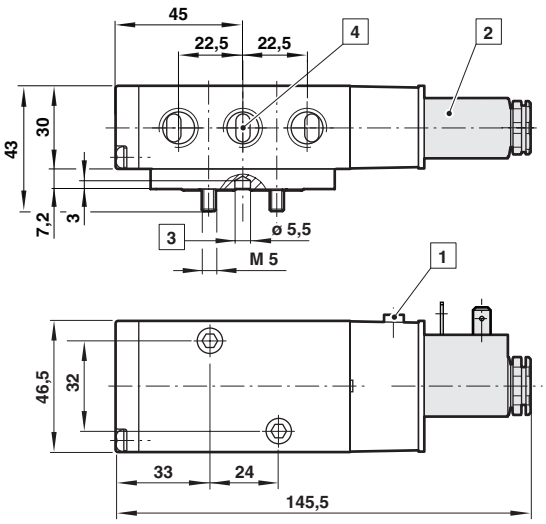

2

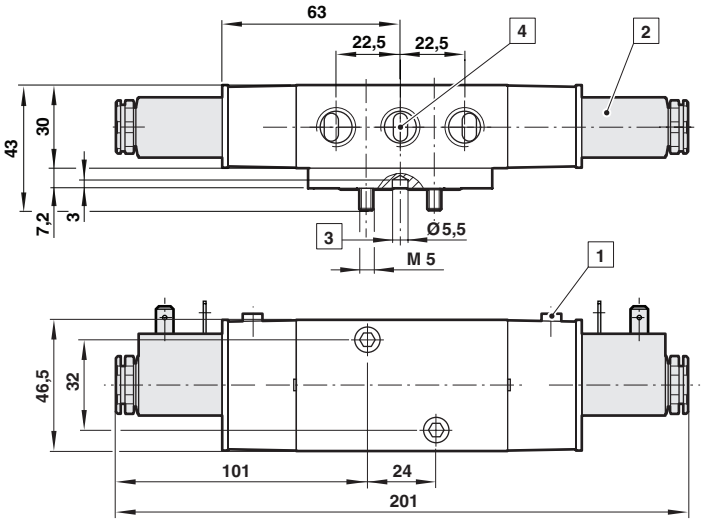

1 Manual override
2 Solenoid operator
3 Coding stud
4 Port size G1/4 or 1/4 NPT

Our policy is one of continued research and development. We therefore reserve the right to amend, without notice, the specifications given in this document. © 2013 Norgren GmbH

Dimensions

Solenoid operators

11

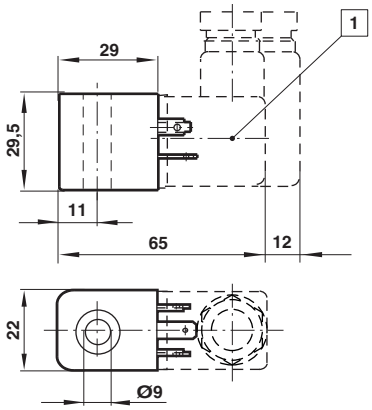

12

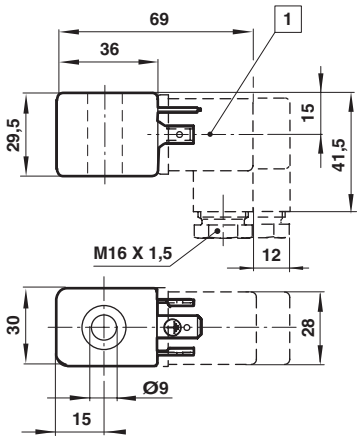

13

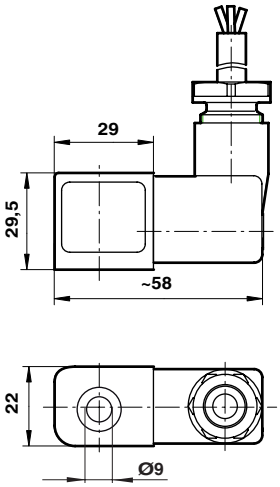

14

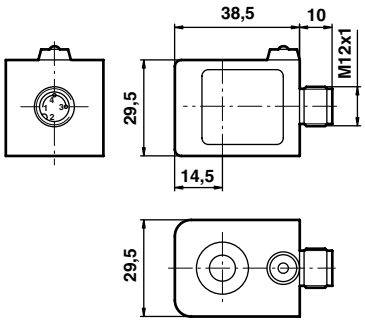

1 Connector 4 x 90° turnable

Electrical connection M 12 x 1

Pin	Signal	Cable
1	+ UB	brown
2	Out 2 (PNP) / analogue 4 to 20 mA	white
3	0 Volt	blue
4	Out 1 (PNP)	black

Our policy is one of continued research and development. We therefore reserve the right to amend, without notice, the specifications given in this document. © 2013 Norgren GmbH

Circuit diagrams

1

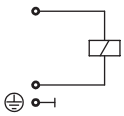

14

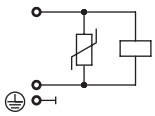

15

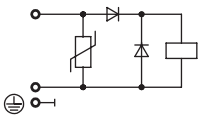

17

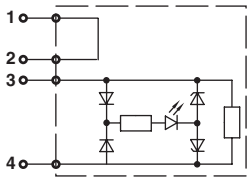

NAMUR hole pattern (driving side)

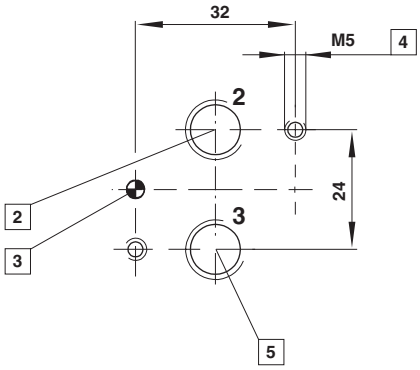

2 Port 2 (A)

3 Coding stud threaded

4 M5 (10 deep)

5 Port 3 (R)

NAMUR quick exhaust module for a better kv-value by exhaust see data sheet 5.4.820

NAMUR interlinking plates in redundancy design for »safety exhausting« and »safety ventilating« see data sheet 5.4.830

Conversion instructions of 5/2 into 3/2 way function

5/2 way function

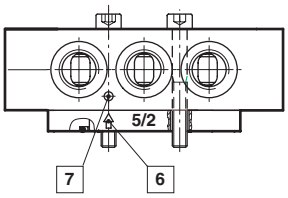

3/2 way function

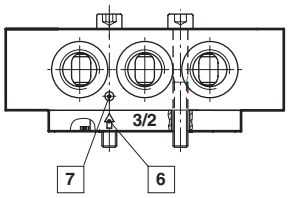

3/2 resp. 5/2 way function can be achieved just by swapping enclosed adaptor plates. Make sure marker and arrow do match as shown on above drawing. Original mode of supply: 5/2 function.

6 Arrow

7 Marker

Single connection plate
Model: 0612790

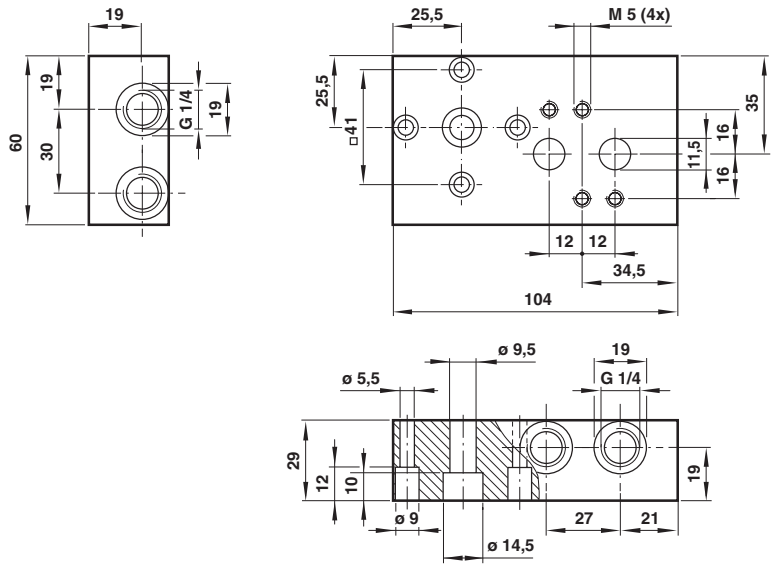

Our policy is one of continued research and development. We therefore reserve the right to amend, without notice, the specifications given in this document. © 2013 Norgren GmbH

NAMUR slot
Model: 0612791

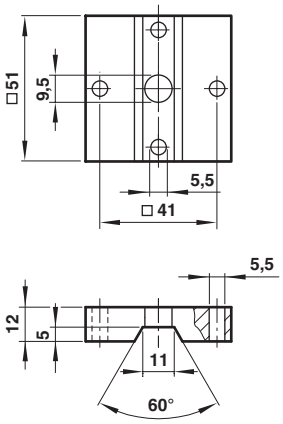

Yoke
Model: 0540593

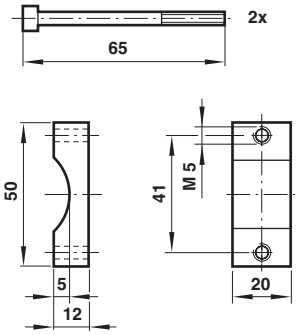

Throttle control plate
Model: 4040239

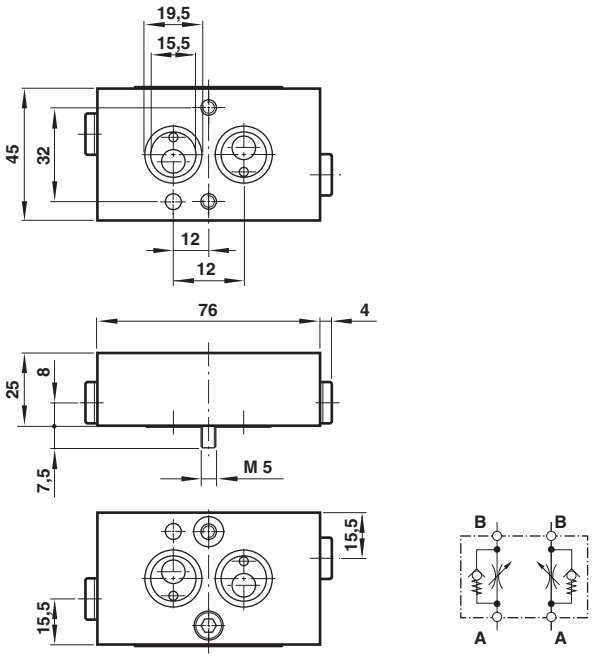

Silencer
Model: M/S2, C/S2

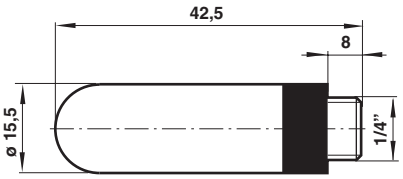

Warning

These products are intended for use in industrial compressed air systems only. Do not use these products where pressures and temperatures can exceed those listed under **»Technical features«**.

Before using these products with fluids other than those specified, for non-industrial applications, life-support systems, or other applications not within published specifications, consult NORGREN.

Through misuse, age, or malfunction, components used in fluid power systems can fail in various modes.

The system designer is warned to consider the failure modes of all component parts used in pneumatic systems and to provide adequate safeguards to prevent personal injury or damage to equipment in the event of such failure.
System designers must provide a warning to end users in the system instructional manual if protection against a failure mode cannot be adequately provided.
System designers and end users are cautioned to review specific warnings found in instruction sheets packed and shipped with these products.

Our policy is one of continued research and development. We therefore reserve the right to amend, without notice, the specifications given in this document. © 2013 Norgren GmbH