B38
Filter/regulator (stainless steel)
3/8 , 1/2 or 3/4 PTF

Designed for use in corrosive environments

Metallic parts meet NACE* Standard MR-01-75

Applications include marine environment, oil and gas production, chemical and food processing, medical analysis

Relieving or non relieving models. Relieving models allow reduction of outlet pressure even when the system is dead-ended

* National Association of Corrosion Engineers – recognised oil-field recommendation for resistance to sulphide stress cracking common in well-head and other corrosive environments

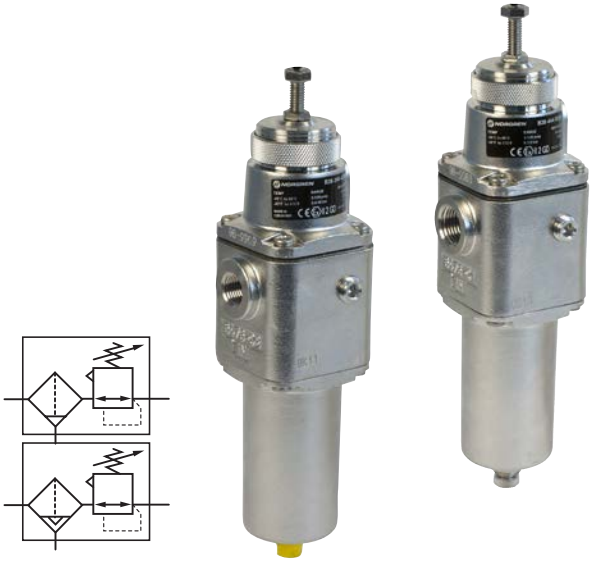

Technical features

Medium:
Compressed air only
Maximum inlet pressure:
31 bar (manual drain)
17 bar (autodrain)
Outlet pressure range:
0,04 ... 2 bar, 0,07 ... 4 bar
0,3 ... 9 bar
Element:
5 or 25 µm

Port sizes:
3/8, 1/2 or 3/4 PTF
1/4 PTF (gauge), 1/8 PTF (relief)
G 1/8 (automatic drain)
Drain:
Manual or automatic
Automatic drain operation conditions (float operated):
To close: > 0,3 bar,
To open: < 0,2 bar

Minimum air flow required to close 1 dm^3/s
Fluid/Ambient temperature:
-40 ... +80°C
Air supply must be dry enough to avoid ice formation at temperatures below +2°C.

Materials:
Body, bowl, bonnet & adjusting screw: stainless steel
Filter element: High density polyethylene
Elastomers: Synthetic rubber

Technical data, standard models, relieving and panel nut

Symbol	Port size	Outlet pressure (bar)	Element (µm)	Flow * (dm^3/s)	Drain	Weight (kg)	Model
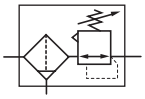	3/8 PTF	0,3 ... 9	5	50	Manual	1,9	B38-344-M1LA
	1/2 PTF	0,3 ... 9	5	50	Manual	1,9	B38-444-M1LA
	3/4 PTF	0,3 ... 9	5	50	Manual	1,9	B38-644-M1LA
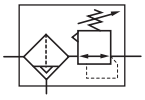	3/8 PTF	0,3 ... 9	5	50	Automatic	1,9	B38-344-A1LA
	1/2 PTF	0,3 ... 9	5	50	Automatic	1,9	B38-444-A1LA
	3/4 PTF	0,3 ... 9	5	50	Automatic	1,9	B38-644-A1LA

* Typical flow with 12 bar inlet pressure, 8 bar set pressure and a 1 bar drop from set.

Option selector

B38-★4★-★★★A

Port size	Substitute
3/8 PTF	3
1/2 PTF	4
3/4 PTF	6

Diaphragm & mounting	Substitute
Relieving with panel nut	4
Non-relieving with panel nut	5

Outlet pressure adjustment ranges (bar)*	Substitute
0,04 ... 2	C
0,07 ... 4	F
0,3 ... 9	L

Element	Substitute
5 µm	1
25 µm	2

Drain	Substitute
Automatic	A
Manual	M

* Outlet pressure can be adjusted to pressures in excess of, and less than, those specified. Do not use these units to control pressures outside of the specified ranges.

Flow characteristics

Inlet pressure: 12 bar, filter element: 25 µm, port size: 1/2 PTF

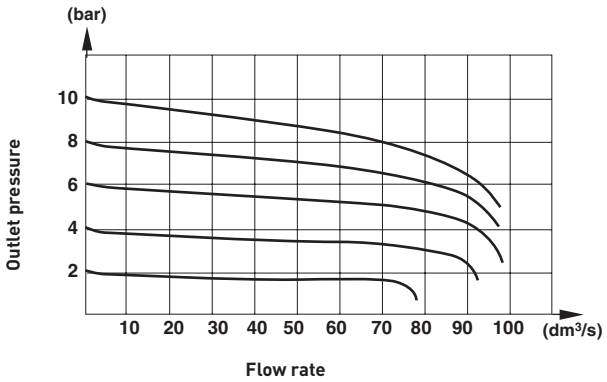

Accessories

Panel nut	Neck mounting bracket	Neck mounting bracket	Gauge *1)	Plastic adjusting knob
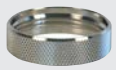		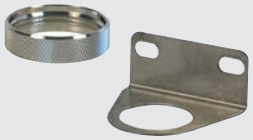		
5988-02	5989-02	18-001-973 (includes panel nut)	18-013-913 (0 ... 6 bar, -40 ... 65°C)	74630-04
			18-013-909 (0 ... 10 bar, -40 ... 65°C)	

*1) Stainless steel items not strictly to NACE standard MR-01-75.

Sevice kits

Filter ele	Valve assembly and diaphragm	Drain kit
		
2787-43 (5 µm element)	2787-41 (relieving)	3000-87 (automatic)
2787-44 (25 µm element)	2787-42 (non-relieving)	

Dimensions

Automatic drain

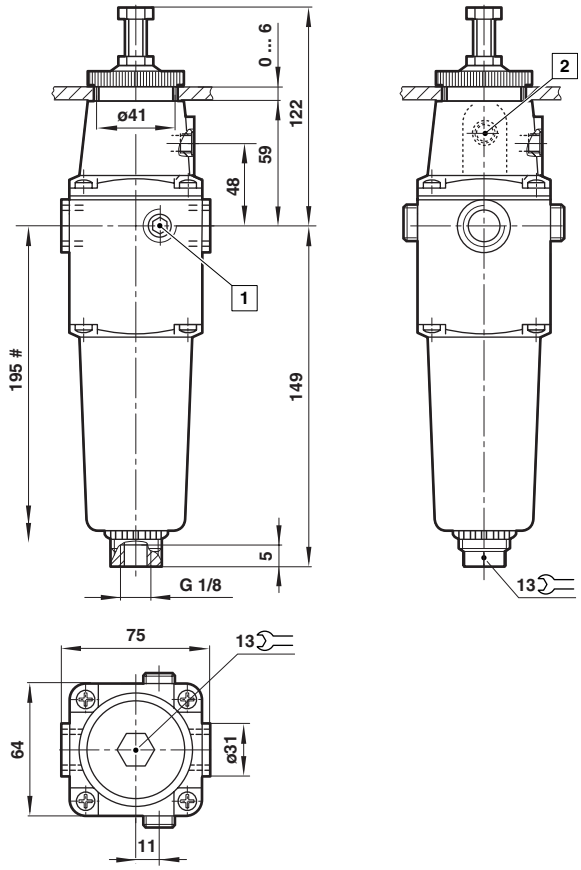

Manual drain

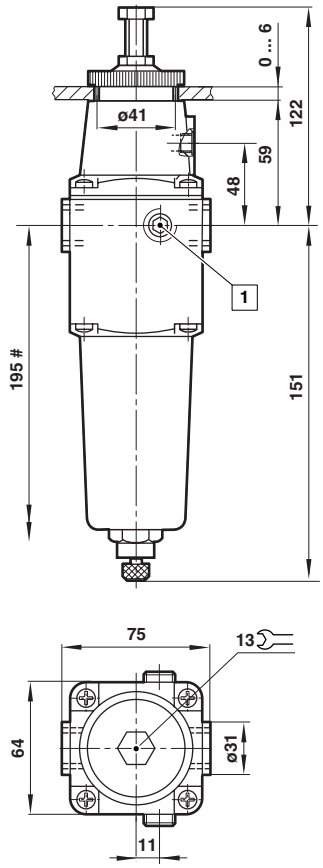

Minimum clearance required to remove bowl
1 1/4 PTF Gauge port
2 1/8 PTF Relief port

Neck mounting bracket

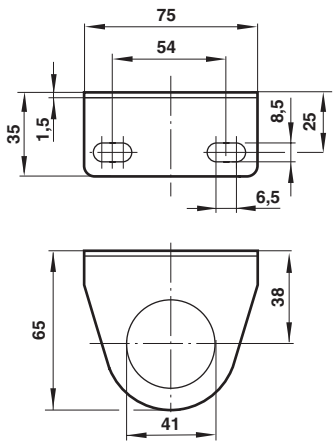

Warning

These products are intended for use in industrial compressed air systems only. Do not use these products where pressures and temperatures can exceed those listed under **»Technical features«**.

Before using these products with fluids other than those specified, for non-industrial applications, life-support systems, or other applications not within published specifications, consult NORGREN.

Through misuse, age, or malfunction, components used in fluid power systems can fail in various modes.

The system designer is warned to consider the failure modes of all component parts used in pneumatic systems and to provide adequate safeguards to prevent personal injury or damage to equipment in the event of such failure.
System designers must provide a warning to end users in the system instructional manual if protection against a failure mode cannot be adequately provided.
System designers and end users are cautioned to review specific warnings found in instruction sheets packed and shipped with these products.