Valve island VS26M modular

Plug-in Mini ISO Valves
2x2/2, 2x3/2, 5/2 and 5/3 valves
ISO 15407-2
Size 26 mm

Used in conjunction with B&R X20- and X67-System

Variable valve configuration from 2 to 20 stations using double width sub-bases

Field expandable and maintenance friendly

Dual spool technology
VS26G Glandless spool and sleeve for long life
VS26S Softseal spool for high flow

Wide range of accessories

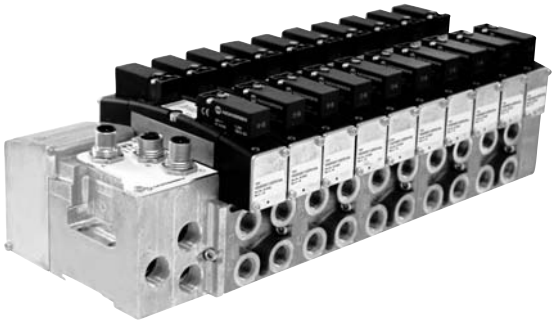

Technical data

Medium:
Compressed air, filtered to 40 µm, lubricated or non-lubricated

Operation:
VS26G: Glandless spool valve, solenoid pilot actuated with external and internal pilot pressure
VS26S: Softseal spool valve, solenoid pilot actuated with external and internal pilot pressure

Mounting:
Sub-base

Ports 2+4:
G1/4, NPTF 1/4, PIF 10 mm, PIF 8 mm, PIF 3/8

Operating pressure:
VS26S and VS26G: 10 bar max.
VS26G (external pilot pressure): 16 bar max.

Flow characteristics:

Series	Function	C	b	A	l/min	Cv	Kv
VS26G	5/2	4,27	0,16	16,04	1000	1,02	0,87
VS26G	5/3	4,27	0,16	16,04	1000	1,02	0,87
VS26S	2x2/2	4,88	0,17	18,40	1150	1,17	1,00
VS26S	2x3/2	5,21	0,20	20,05	1250	1,27	1,09
VS26S	5/2	5,63	0,20	21,67	1350	1,37	1,18
VS26S	5/3	5,63	0,20	21,67	1350	1,37	1,18

Ambient temperature:
-15°C ... +50°C

Medium temperature:
-5°C ... +50°C
(Consult our Technical Service for use below +2°C)

Materials:

Body/sub-base: die-cast aluminium
Glandless spool & sleeve (VS26G): aluminium, hard anodised, teflon coated
Softseal spool (VS26S): Aluminium with HNBR seals
Plastic parts: POM, PA, PPA
Static seals: NBR
Mounting sheets/screws: steel, zinc coated
Springs: stainless steel
Sandwich plates: aluminium bar material, PA
Electrical contacts: brass, tin/gold coated
PCB: glass epoxy

Electrical parameters

See page 4

Ordering information

See page 14

Content

Content	see page
Valves	2
Accesories	5
Valve island	8
Sandwich plates	9, 10, 11
End plate with X2X interface	13
Models of sub-bases and end plates	15
Single parts of valve island	15

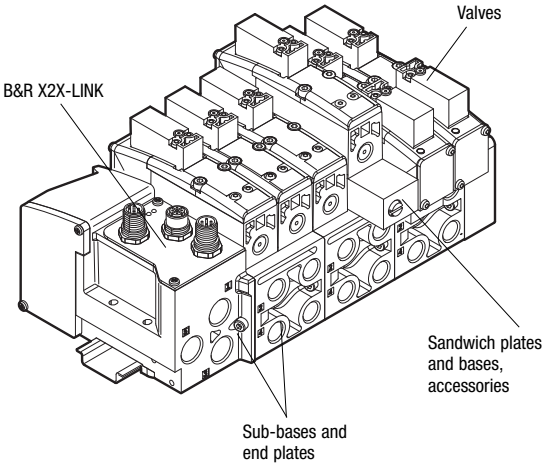

Our policy is one of continued research and development. We therefore reserve the right to amend, without notice, the specifications given in this document.

2x2/2 Double solenoid actuated softseal valves (flow 1150 l/min)

Symbol	Model	Function 2x2/2	Actuation/ return	Pilot supply	Pilot pressure (bar)	Operating pressure (bar)	Manual override	Voltage	Short code
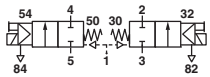	VS26SE11DF313A	NC	Sol/Spring	Internal	3...10 *1)	-0,9...10	Push only	24 V d.c. 1,2 W	STU
	VS26SE11DF213A	NC	Sol/Spring	Internal	3...10 *1)	-0,9...10	Push & turn	24 V d.c. 1,2 W	STT
	VS26SE11DF513A	NC	Sol/Spring	Internal	3...10 *1)	-0,9...10	Extended, push only	24 V d.c. 1,2 W	STE
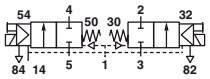	VS26SE22DF313A	NC	Sol/Spring	External	1,7 + (0,35 x pressure) *1), *2)	-0,9...10	Push only	24 V d.c. 1,2 W	SWU
	VS26SE22DF213A	NC	Sol/Spring	External	1,7 + (0,35 x pressure) *1), *2)	-0,9...10	Push & turn	24 V d.c. 1,2 W	SWT
	VS26SE22DF513A	NC	Sol/Spring	External	1,7 + (0,35 x pressure) *1), *2)	-0,9...10	Extended, push only	24 V d.c. 1,2 W	SWE
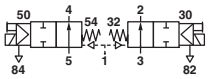	VS26SF11DF313A	NO	Sol/Spring	Internal	3...10 *1)	-0,9...10	Push only	24 V d.c. 1,2 W	SUU
	VS26SF11DF213A	NO	Sol/Spring	Internal	3...10 *1)	-0,9...10	Push & turn	24 V d.c. 1,2 W	SUT
	VS26SF11DF513A	NO	Sol/Spring	Internal	3...10 *1)	-0,9...10	Extended, push only	24 V d.c. 1,2 W	SUE
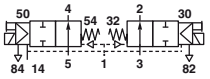	VS26SF22DF313A	NO	Sol/Spring	External	1,7 + (0,35 x pressure) *1), *2)	-0,9...10	Push only	24 V d.c. 1,2 W	SXU
	VS26SF22DF213A	NO	Sol/Spring	External	1,7 + (0,35 x pressure) *1), *2)	-0,9...10	Push & turn	24 V d.c. 1,2 W	SXT
	VS26SF22DF513A	NO	Sol/Spring	External	1,7 + (0,35 x pressure) *1), *2)	-0,9...10	Extended, push only	24 V d.c. 1,2 W	SXE
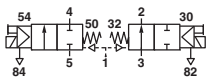	VS26SG11DF313A	NO/NC	Sol/Spring	Internal	3...10 *1)	-0,9...10	Push only	24 V d.c. 1,2 W	SVU
	VS26SG11DF213A	NO/NC	Sol/Spring	Internal	3...10 *1)	-0,9...10	Push & turn	24 V d.c. 1,2 W	SVT
	VS26SG11DF513A	NO/NC	Sol/Spring	Internal	3...10 *1)	-0,9...10	Extended, push only	24 V d.c. 1,2 W	SVE
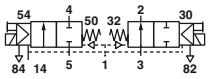	VS26SG22DF313A	NO/NC	Sol/Spring	External	1,7 + (0,35 x pressure) *1), *2)	-0,9...10	Push only	24 V d.c. 1,2 W	SYU
	VS26SG22DF213A	NO/NC	Sol/Spring	External	1,7 + (0,35 x pressure) *1), *2)	-0,9...10	Push & turn	24 V d.c. 1,2 W	SYT
	VS26SG22DF513A	NO/NC	Sol/Spring	External	1,7 + (0,35 x pressure) *1), *2)	-0,9...10	Extended, push only	24 V d.c. 1,2 W	SYE

2x3/2 Double solenoid actuated softseal valves (flow = 1250 l/min)

Symbol	Model	Function 2x3/2	Actuation/ return	Pilot supply gung	Pilot pressure (bar)	Operating pressure (bar)	Manual override	Voltage	Short code
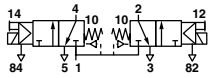	VS26SA11DF313A	NC	Sol/Spring	Internal	-	3...10	Push only	24 V d.c. 1,2 W	SAU
	VS26SA11DF213A	NC	Sol/Spring	Internal	-	3...10	Push & turn	24 V d.c. 1,2 W	SAT
	VS26SA11DF513A	NC	Sol/Spring	Internal	-	3...10	Extended, push only	24 V d.c. 1,2 W	SAE
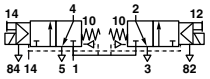	VS26SA22DF313A	NC	Sol/Spring	External	1,7 + (0,5 x op. pressure)	0...10	Push only	24 V d.c. 1,2 W	SDU
	VS26SA22DF213A	NC	Sol/Spring	External	1,7 + (0,5 x op. pressure)	0...10	Push & turn	24 V d.c. 1,2 W	SDT
	VS26SA22DF513A	NC	Sol/Spring	External	1,7 + (0,5 x op. pressure)	0...10	Extended, push only	24 V d.c. 1,2 W	SDE
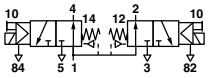	VS26SB11DF313A	NO	Sol/Spring	Internal	-	3...10	Push only	24 V d.c. 1,2 W	SBU
	VS26SB11DF213A	NO	Sol/Spring	Internal	-	3...10	Push & turn	24 V d.c. 1,2 W	SBT
	VS26SB11DF513A	NO	Sol/Spring	Internal	-	3...10	Extended, push only	24 V d.c. 1,2 W	SBE
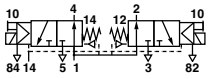	VS26SB22DF313A	NO	Sol/Spring	External	1,7 + (0,5 x op. pressure)	0...10	Push only	24 V d.c. 1,2 W	SEU
	VS26SB22DF213A	NO	Sol/Spring	External	1,7 + (0,5 x op. pressure)	0...10	Push & turn	24 V d.c. 1,2 W	SET
	VS26SB22DF513A	NO	Sol/Spring	External	1,7 + (0,5 x op. pressure)	0...10	Extended, push only	24 V d.c. 1,2 W	SEE
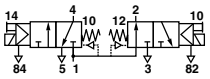	VS26SC11DF313A	NO/NC	Sol/Spring	Internal	-	3...10	Push only	24 V d.c. 1,2 W	SCU
	VS26SC11DF213A	NO/NC	Sol/Spring	Internal	-	3...10	Push & turn	24 V d.c. 1,2 W	SCT
	VS26SC11DF513A	NO/NC	Sol/Spring	Internal	-	3...10	Extended, push only	24 V d.c. 1,2 W	SCE
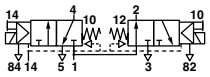	VS26SC22DF313A	NO/NC	Sol/Spring	External	1,7 + (0,5 x op. pressure)	0...10	Push only	24 V d.c. 1,2 W	SFU
	VS26SC22DF213A	NO/NC	Sol/Spring	External	1,7 + (0,5 x op. pressure)	0...10	Push & turn	24 V d.c. 1,2 W	SFT
	VS26SC22DF513A	NO/NC	Sol/Spring	External	1,7 + (0,5 x op. pressure)	0...10	Extended, push only	24 V d.c. 1,2 W	SFE

Valve dimensions see page 6

Valve functions designations:
NO = Normally open, NC = Normally closed
*1) Pressure supply through port 1
*2) Pilot air supply through port 12/14

Warning

These products are intended for use in industrial compressed air systems only. Do not use these products where pressures and temperatures can exceed those listed under **'Technical Data'.**

Before using these products with fluids other than those specified, for non-industrial applications, life-support systems, or other applications not within published specifi?cations, consult NORGREN.

Through misuse, age, or malfunction, components used in fluid power systems can fail in various modes. The system designer is warned to consider the failure modes of all component parts used in fluid power systems and to provide adequate safeguards to prevent personal injury or damage to equipment in the event of such failure.

System designers must provide a warning to end users in the system instructional manual if protection against a failure mode cannot be adequately provided.

System designers and end users are cautioned to review specific warnings found in instruction sheets packed and shipped with these products.

Our policy is one of continued research and development. We therefore reserve the right to amend, without notice, the specifications given in this document.

5/2 Single and double solenoid actuated glandless valves (flow 1000 l/min)

Symbol	Model	Actuation/ return	Pilot supply	Pilot pressure (bar)	Operating pressure (bar)	Manual override	Voltage	Short code
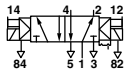	VS26G511DF313A	Sol/Sol	Internal	–	2...10	Push only	24 V d.c. 1,2 W	GJU
	VS26G511DF213A	Sol/Sol	Internal	–	2...10	Push & turn	24 V d.c. 1,2 W	GJT
	VS26G511DF513A	Sol/Sol	Internal	–	2...10	Extended, push only	24 V d.c. 1,2 W	GJE
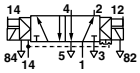	VS26G522DF313A	Sol/Sol	External	2...10	-0,9...16	Push only	24 V d.c. 1,2 W	GKU
	VS26G522DF213A	Sol/Sol	External	2...10	-0,9...16	Push & turn	24 V d.c. 1,2 W	GKT
	VS26G522DF513A	Sol/Sol	External	2...10	-0,9...16	Extended, push only	24 V d.c. 1,2 W	GKE
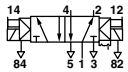	VS26G591DF313A	Sol (Priority)/Sol	Internal	–	2...10	Push only	24 V d.c. 1,2 W	GSU
	VS26G591DF213A	Sol (Priority)/Sol	Internal	–	2...10	Push & turn	24 V d.c. 1,2 W	GST
	VS26G591DF513A	Sol (Priority)/Sol	Internal	–	2...10	Extended, push only	24 V d.c. 1,2 W	GSE
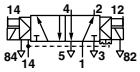	VS26G592DF313A	Sol (Priority)/Sol	External	2...10	-0,9...16	Push only	24 V d.c. 1,2 W	GTU
	VS26G592DF213A	Sol (Priority)/Sol	External	2...10	-0,9...16	Push & turn	24 V d.c. 1,2 W	GTT
	VS26G592DF513A	Sol (Priority)/Sol	External	2...10	-0,9...16	Extended, push only	24 V d.c. 1,2 W	GTE
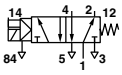	VS26G517DF313A	Sol/Spring	Internal	–	1,6...10	Push only	24 V d.c. 1,2 W	GGU
	VS26G517DF213A	Sol/Spring	Internal	–	1,6...10	Push & turn	24 V d.c. 1,2 W	GGT
	VS26G517DF513A	Sol/Spring	Internal	–	1,6...10	Extended, push only	24 V d.c. 1,2 W	GGE
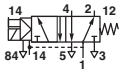	VS26G527DF313A	Sol/Spring	External	1,6...10	-0,9...16	Push only	24 V d.c. 1,2 W	GHU
	VS26G527DF213A	Sol/Spring	External	1,6...10	-0,9...16	Push & turn	24 V d.c. 1,2 W	GHT
	VS26G527DF513A	Sol/Spring	External	1,6...10	-0,9...16	Extended, push only	24 V d.c. 1,2 W	GHE

5/2 Solenoid actuated softseal valves (flow 1350 l/min)

Symbol	Model	Actuation/ return	Pilot supply	Pilot pressure (bar)	Operating pressure (bar)	Manual override	Voltage	Short code
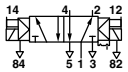	VS26S511DF313A	Sol/Sol	Internal	–	2...10	Push only	24 V d.c. 1,2 W	SJU
	VS26S511DF213A	Sol/Sol	Internal	–	2...10	Push & turn	24 V d.c. 1,2 W	SJT
	VS26S511DF513A	Sol/Sol	Internal	–	2...10	Extended, push only	24 V d.c. 1,2 W	SJE
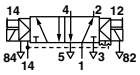	VS26S522DF313A	Sol/Sol	External	2...10	-0,9...10	Push only	24 V d.c. 1,2 W	SKU
	VS26S522DF213A	Sol/Sol	External	2...10	-0,9...10	Push & turn	24 V d.c. 1,2 W	SKT
	VS26S522DF513A	Sol/Sol	External	2...10	-0,9...10	Extended, push only	24 V d.c. 1,2 W	SKE
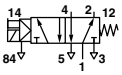	VS26S517DF313A	Sol/Spring	Internal	–	2...10	Push only	24 V d.c. 1,2 W	SGU
	VS26S517DF213A	Sol/Spring	Internal	–	2...10	Push & turn	24 V d.c. 1,2 W	SGT
	VS26S517DF513A	Sol/Spring	Internal	–	2...10	Extended, push only	24 V d.c. 1,2 W	SGE
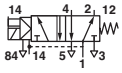	VS26S527DF313A	Sol/Spring	External	2...10	-0,9...10	Push only	24 V d.c. 1,2 W	SHU
	VS26S527DF213A	Sol/Spring	External	2...10	-0,9...10	Push & turn	24 V d.c. 1,2 W	SHT
	VS26S527DF513A	Sol/Spring	External	2...10	-0,9...10	Extended, push only	24 V d.c. 1,2 W	SHE

5/3 Double solenoid actuated glandless valves (flow 1000 l/min)

Symbol	Model	Function 5/3	Actuation/ return	Pilot supply	Pilot pressure (bar)	Operating pressure (bar)	Manual override	Voltage	Short code
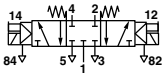	VS26G611DF313A	APB	Sol/Sol	Internal	–	2...10	Push only	24 V d.c. 1,2 W	GLU
	VS26G611DF213A	APB	Sol/Sol	Internal	–	2...10	Push & turn	24 V d.c. 1,2 W	GLT
	VS26G611DF513A	APB	Sol/Sol	Internal	–	2...10	Extended, push only	24 V d.c. 1,2 W	GLE
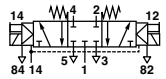	VS26G622DF313A	APB	Sol/Sol	External	2...10	-0,9...16	Push only	24 V d.c. 1,2 W	GMU
	VS26G622DF213A	APB	Sol/Sol	External	2...10	-0,9...16	Push & turn	24 V d.c. 1,2 W	GMT
	VS26G622DF513A	APB	Sol/Sol	External	2...10	-0,9...16	Extended, push only	24 V d.c. 1,2 W	GME
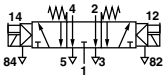	VS26G711DF313A	COE	Sol/Sol	Internal	–	2...10	Push only	24 V d.c. 1,2 W	GQU
	VS26G711DF213A	COE	Sol/Sol	Internal	–	2...10	Push & turn	24 V d.c. 1,2 W	GQT
	VS26G711DF513A	COE	Sol/Sol	Internal	–	2...10	Extended, push only	24 V d.c. 1,2 W	GQE
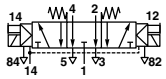	VS26G722DF313A	COE	Sol/Sol	External	2...10	-0,9...16	Push only	24 V d.c. 1,2 W	GRU
	VS26G722DF213A	COE	Sol/Sol	External	2...10	-0,9...16	Push & turn	24 V d.c. 1,2 W	GRT
	VS26G722DF513A	COE	Sol/Sol	External	2...10	-0,9...16	Extended, push only	24 V d.c. 1,2 W	GRE

Valve dimensions see page 6

Our policy is one of continued research and development. We therefore reserve the right to amend, without notice, the specifications given in this document.

5/3 Double solenoid actuated softseal valves (flow 1350 l/min)

Symbol	Model	Function 5/3	Actuation/ return	Pilot supply	Pilot pressure (bar)	Operating pressure (bar)	Manual override	Voltage	Short code
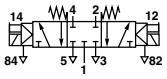	VS26S611DF313A	APB	Sol/Sol	Internal	–	2,5...10	Push only	24 V d.c. 1,2 W	SLU
	VS26S611DF213A	APB	Sol/Sol	Internal	–	2,5...10	Push & turn	24 V d.c. 1,2 W	SLT
	VS26S611DF513A	APB	Sol/Sol	Internal	–	2,5...10	Extended, push only	24 V d.c. 1,2 W	SLE
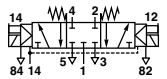	VS26S622DF313A	APB	Sol/Sol	External	2,5...10	-0,9...10	Push only	24 V d.c. 1,2 W	SMU
	VS26S622DF213A	APB	Sol/Sol	External	2,5...10	-0,9...10	Push & turn	24 V d.c. 1,2 W	SMT
	VS26S622DF513A	APB	Sol/Sol	External	2,5...10	-0,9...10	Extended, push only	24 V d.c. 1,2 W	SME
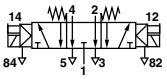	VS26S711DF313A	COE	Sol/Sol	Internal	–	2,5...10	Push only	24 V d.c. 1,2 W	SQU
	VS26S711DF213A	COE	Sol/Sol	Internal	–	2,5...10	Push & turn	24 V d.c. 1,2 W	SQT
	VS26S711DF513A	COE	Sol/Sol	Internal	–	2,5...10	Extended, push only	24 V d.c. 1,2 W	SQE
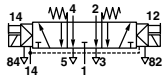	VS26S722DF313A	COE	Sol/Sol	External	2,5...10	-0,9...10	Push only	24 V d.c. 1,2 W	SRU
	VS26S722DF213A	COE	Sol/Sol	External	2,5...10	-0,9...10	Push & turn	24 V d.c. 1,2 W	SRT
	VS26S722DF513A	COE	Sol/Sol	External	2,5...10	-0,9...10	Extended, push only	24 V d.c. 1,2 W	SRE

Valve dimensions see page 6
Valve functions designations:
APB = All Ports Blocked COE = Centre Open Exhaust

Options selector

VS26★★★★DF★13A

Spool technology	Substitute
Glandless spool & sleeve	G
Softseal spool	S

Valve function	Substitute
2x3/2 way valve, normally closed *1)	A
2x3/2 way valve, normally open *1)	B
2x3/2 way valve, normally open/normally closed *1)	C
2x2/2 way valve, normally closed *1)	E
2x2/2 way valve, normally open *1)	F
2x2/2 way valve, normally open/Normally closed *1)	G
5/2 way valve	5
5/3 All ports blocked (APB)	6
5/3 Centre open exhaust (COE)	7
5/3 Centre open pressure (COP)	B

Manual override *3)	Substitute
Push & turn	2
Push only	3
Extended, push only	5

Actuation/Pilot supply	Substitute
Solenoid/Spring Internal pilot supply	17
Solenoid/Spring External pilot supply	27
Solenoid/Solenoid Internal pilot supply	11
Solenoid/Solenoid External pilot supply	22
Solenoid priority side 14/Solenoid (5/2 only) Internal pilot supply *2)	91
Solenoid priority side 14/Solenoid (5/2 only) External pilot supply *2)	92

*1) Available with softseal spool only (VS26S).
*2) Available with glandless spool & sleeve only (VS26G).
*3) Option “without manual override” available on request.

Electrical details for solenoid operators

Voltage tolerances	24V DC +/- 10%
Rating	100 % ED
Inlet orifice	0,8 mm
Indication	LED green
Surge surpression	Transil diode
Protection class	IP65
Materials	PPS (body), Viton & NBR (seal)

Electromagnetic compatibility (EMV):

EU-conforming to 89/336/EWG (CE - logo)

All VS26 V d.c. products are designed to be used with a protective extra low voltage (PELV) power supply.

Our policy is one of continued research and development. We therefore reserve the right to amend, without notice, the specifications given in this document.

Accessories

DIN EN 50 022 rail (1 metre)	DIN-rail mounting kit	Blanking disk kit for modular sub-base	Manual override set-up kit	Spare valve identification labels *1)	Blanking plug for base connector hole *2)
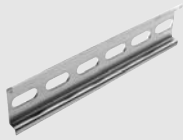					
V10009-C00 (35 x 7,5 mm)	V70531-KA0	V70522-K00 (Ports 1, 3, 5)	VS2672906-KG00	VS2672905-KG00 (10 pcs)	VS2672914-KG00
V10592-C01 (35 x 15 mm)		V70523-K00 (Port 12/14)			

*1) When purchasing assembled valve islands from Norgren, valve identification labels are already included.
*2) When V44/V45 valves are fitted on VS26 bases.

Base accessories, connector

Intermediate supply/exhaust manifold	Blanking plate	Soft start dump valve	Connector
Page 11	Page 11	Page 7	Page 13
VS2672902-BG00 (G1/4)	VS2672904-KG00	VSP150127	
VS2672902-RG00 (NPTF1/4)			

Sandwich plates

Single pressure regulator plate	Double pressure regulator plate	Flow regulator plate	Sandwich plate with additional pressure port 1	Single valve shut-off plate
	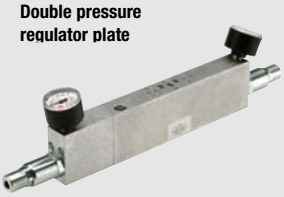			
Page 9	Page 9	Page 10	Page 10/13	Page 11
VS2672900-KG10 (port 1)	VS2672900-KG40 (ports 2+4)	VS2672901-KG00 (ports 3+5)	VS2672928-KG00 (G1/4)	VS2672903-KG00 (port 1)
VS2672900-KG20 (port 2)			VS2672929-KG00 (NPTF1/4)	
VS2672900-KG30 (port 4)				

End plates

End plate kit
Page 8 for dimensions. Page 15 for ordering information.

Modular sub-base

Double station modular sub-base	Single station modular sub-base
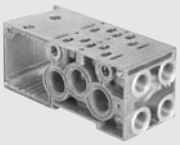	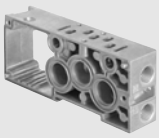
Page 8 for dimensions. Page 15 for ordering information.	

Our policy is one of continued research and development. We therefore reserve the right to amend, without notice, the specifications given in this document.

Valve dimensions

VS26*5*7DF*13A models

5/2 Single solenoid pilot valve
Mechanical spring return

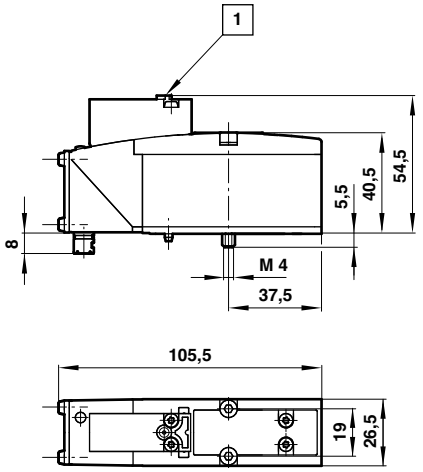

VS26****DF*13A models

2x2/2, 2x3/2, 5/2 and 5/3 Double solenoid pilot valve

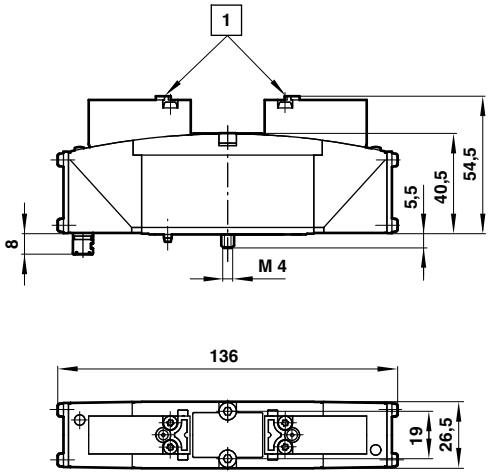

1 **Manual override**

Our policy is one of continued research and development. We therefore reserve the right to amend, without notice, the specifications given in this document.

Soft start dump valve

Technical data
Operating pressure: 3 ... 10 bar
Flow: see diagram
Flow rate max: 3000 l/min

Electrical parameters
Voltage: 24 V d.c. ± 10%
Power: 6 W

Note: When using a soft start dump valve subsequent valves should use an external pilot supply

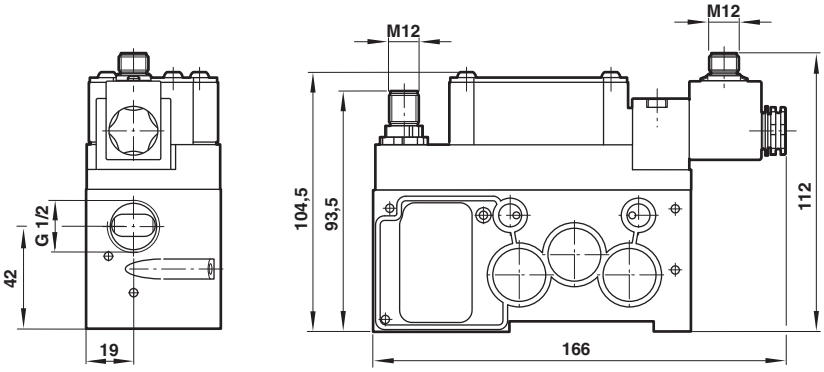

Valve control: M12, 4 pin Connector A coded

Pin No.	Function
1	Solenoid by-passed for Desina analysis
2	
3	0 V
4	+24 V d.c. valve

Connector pins

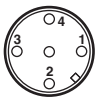

Enable signal: M12, 4 pin Connector A coded

Pin Nr.	Function
1	+ (positive)
2	
3	
4	-(negative)

Connector pins

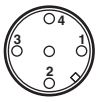

Connectors see page 14

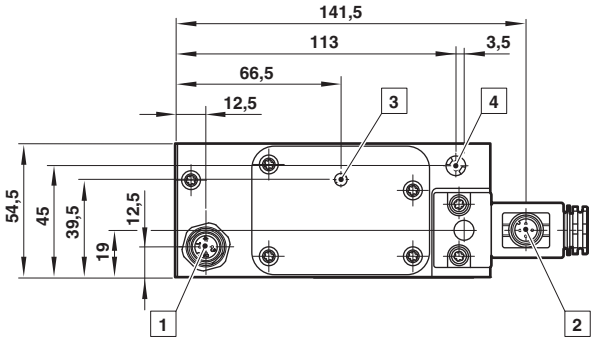

1 Switched position indicator via M12
2 Power supply for soft start dump valve
3 Adjustment of start up time
4 Push and turn manual override

Filling curve at 6 bar 3 litre volumes

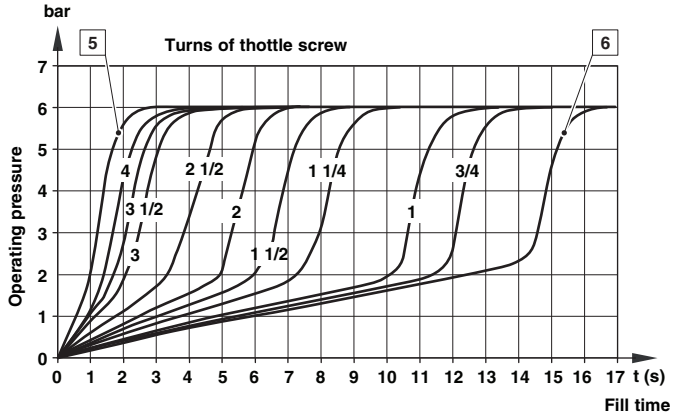

Filling curve at 10 bar 3 litre volumes

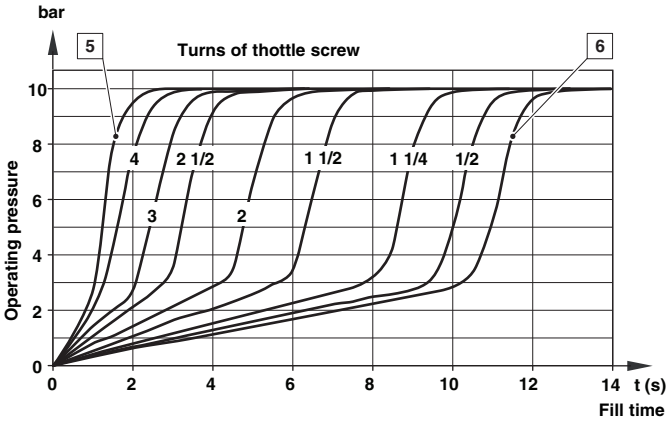

Exhaust emission of 3 litre volumes at 6 and 10 bar

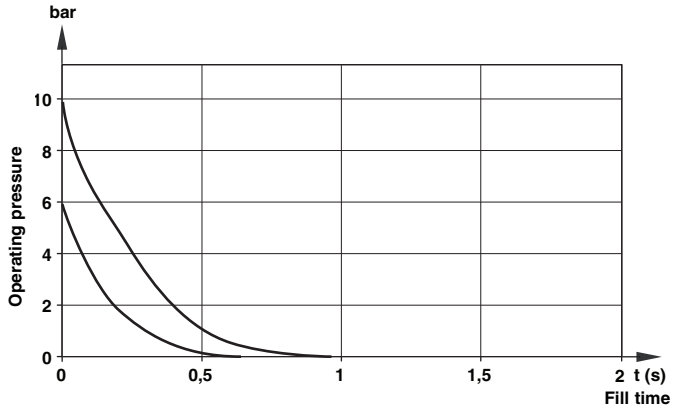

5 Throttle screw open
6 Throttle screw closed

Our policy is one of continued research and development. We therefore reserve the right to amend, without notice, the specifications given in this document.

Valve island with B&R X20- and X67-System across X2X-Link

For ordering information port sizes of modular sub-bases and end plates see page 15

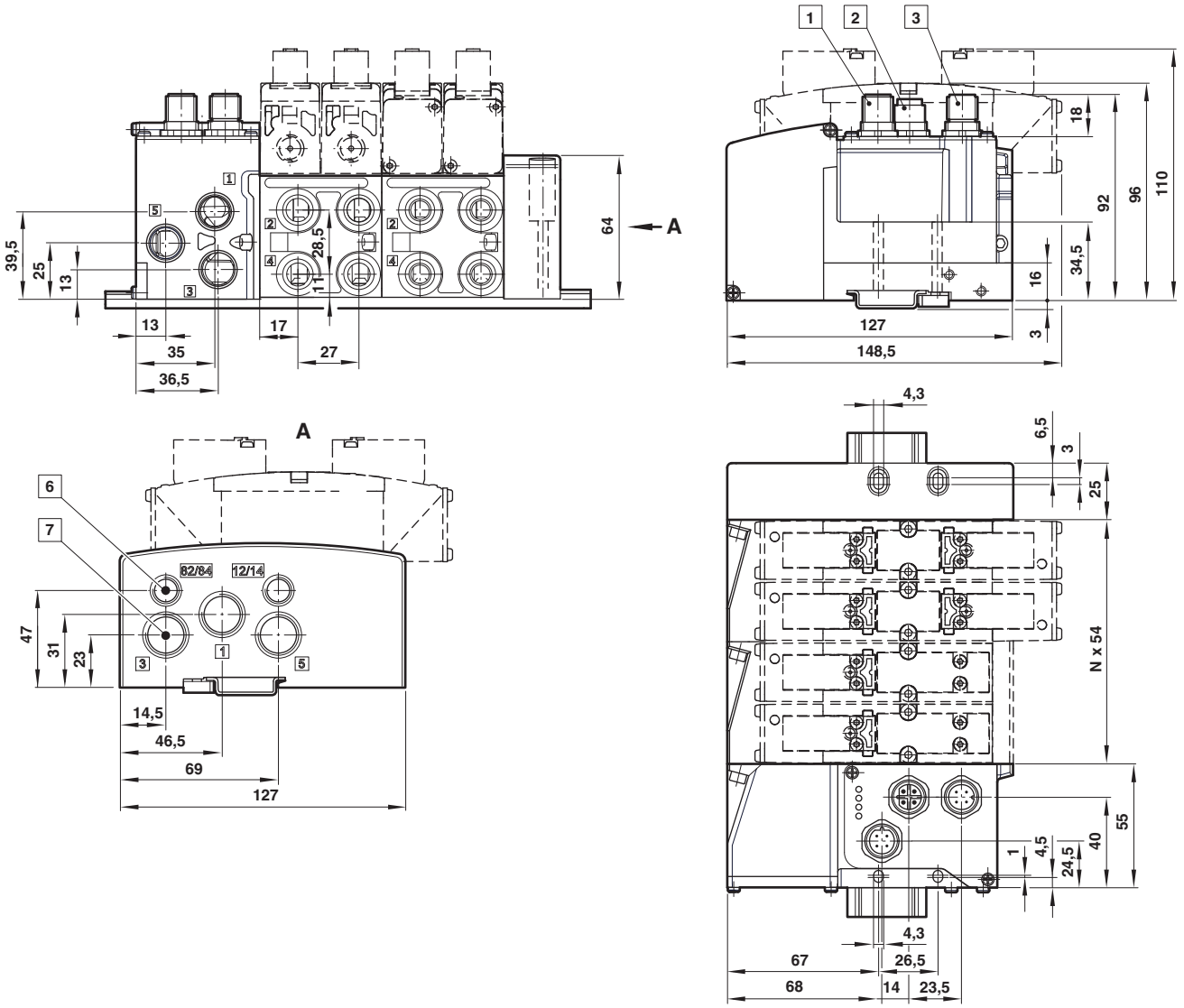

N	Number of double station modular sub-base
1	X2X-IN
2	X2X-OUT
3	Power
6	Pilot ports G 1/8 (1/8 NPT)
7	Supply and exhaust ports G 3/8 (3/8 NPT)

Note: Never plug port 82/84. Plugging this port will cause vales to malfunction

Our policy is one of continued research and development. We therefore reserve the right to amend, without notice, the specifications given in this document.

Sandwich plates

Pressure regulator sandwich plates

Symbol	Model	Description
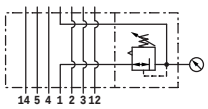	VS2672900-KG10	Regulation of port 1
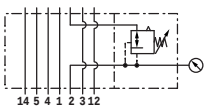	VS2672900-KG20	Regulation of port 2

Symbol	Model	Description
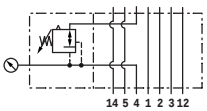	VS2672900-KG30	Regulator of port 4
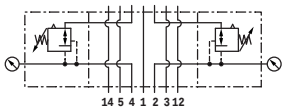	VS2672900-KG40	Regulation of ports 2 and 4

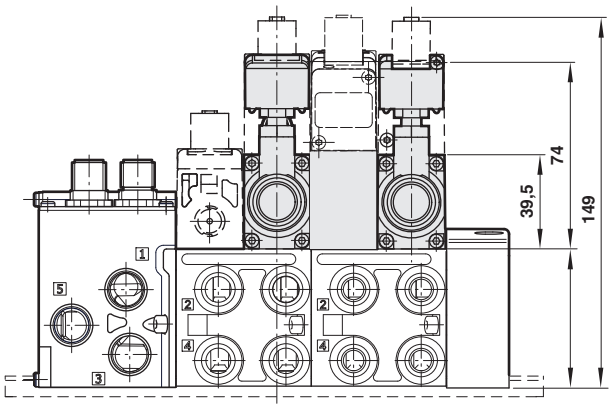

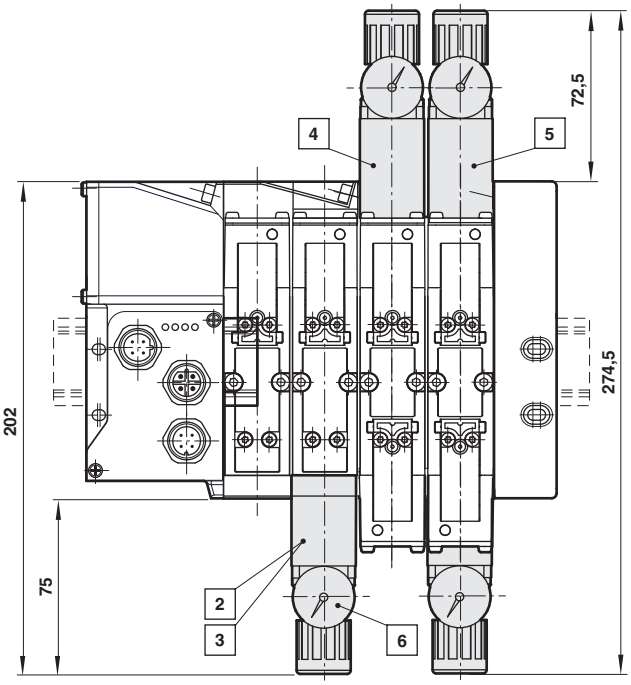

Flow characteristics for pressure regulator plates

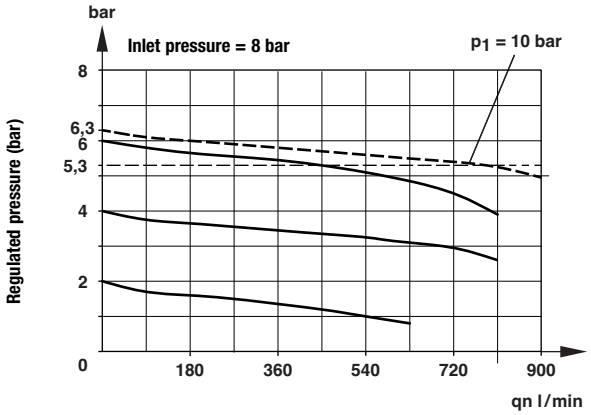

Hysteresis

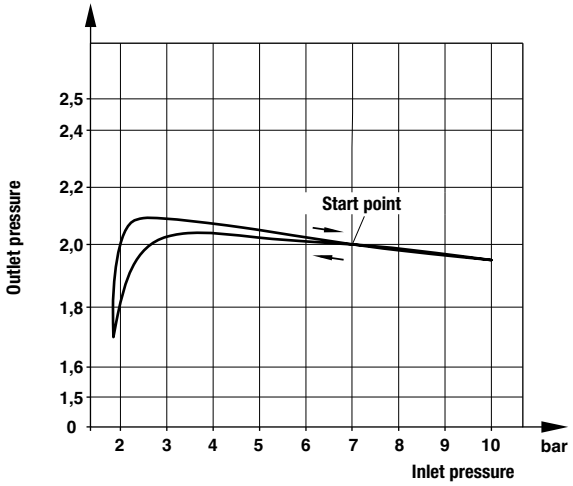

Spare part number for gauge: V70534-500

- 2 **Regulation of port 1**
- 3 **Regulation of port 2**
- 4 **Regulation of port 4**
- 5 **Regulation of port 2+4**
- 6 **Gauge**

Our policy is one of continued research and development. We therefore reserve the right to amend, without notice, the specifications given in this document.

Sandwich plates

Flow regulator sandwich plate

Symbol	Model	Description
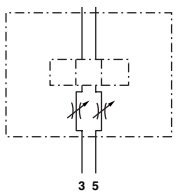	VS2672901-KG00	Flow regulator supplied with gasket, dual regulation of exhaust ports 3 and 5

Sandwich plate with additional pressure port 1

Symbol	Model	Description
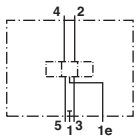	VS2672928-KG00	Sandwich plate with additional pressure port 1 (G 1/4), supplied with gasket
	VS2672929-KG00	Sandwich plate with additional pressure port 1 (NPTF1/4), supplied with gasket

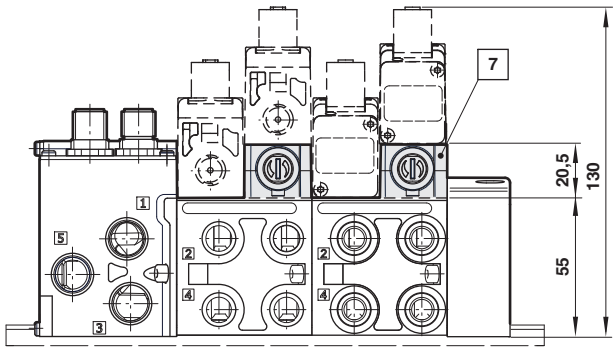

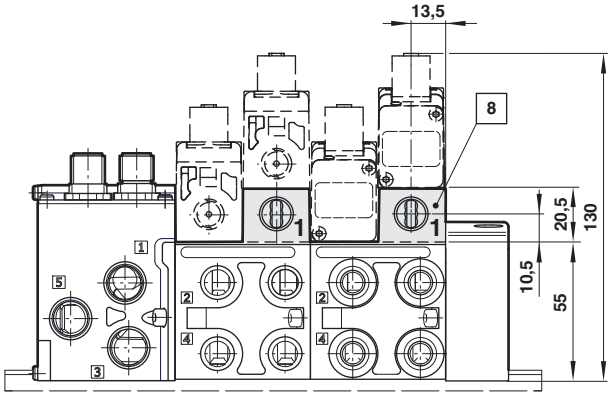

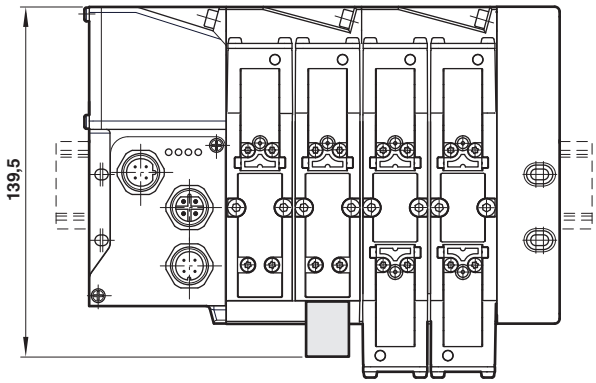

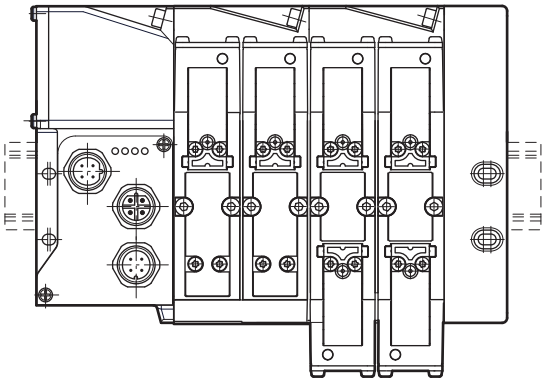

7 **Flow regulator plate**

8 **Sandwich plate with additional pressure port 1**

Flow characteristics

Dual regulation of exhaust ports 3 and 5

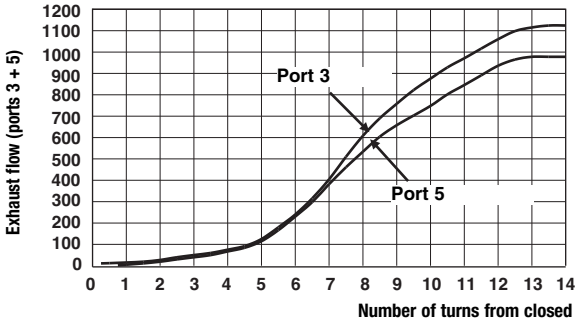

Flow port 1 & 2 and 1 & 4 remains unchanged.
Flow measured at 6 bar inlet, pressure drop 1 bar

Our policy is one of continued research and development. We therefore reserve the right to amend, without notice, the specifications given in this document.

Sandwich plates
Single valve shut-off plate

Symbol	Model	Description
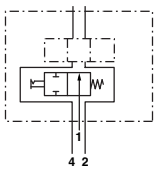	VS2672903-KG00	Single valve shut-off plate supplied with gasket

Allows individual exchange of valve while valve island is pressurised by port 1.
Flow restricted to max. 800 l/min.

Base accessories

Model	Description
VS2672902-BG00	Intermediate supply/exhaust manifold (ISEM), port size G1/4 *1)
VS2672902-RG00	Intermediate supply/exhaust manifold (ISEM), port size NPTF1/4 *1)
VS2672904-KG00	Blanking plate for unused stations (supplied with gasket)

*1) For use see page 13

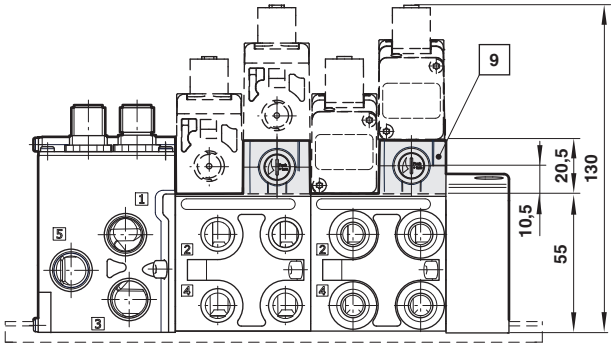

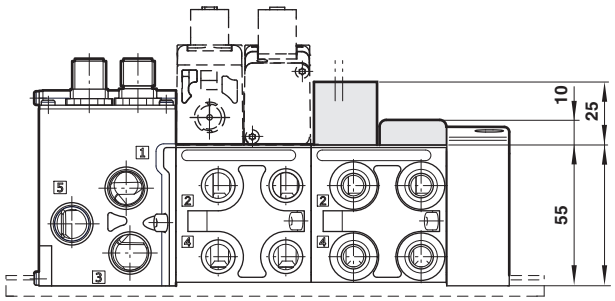

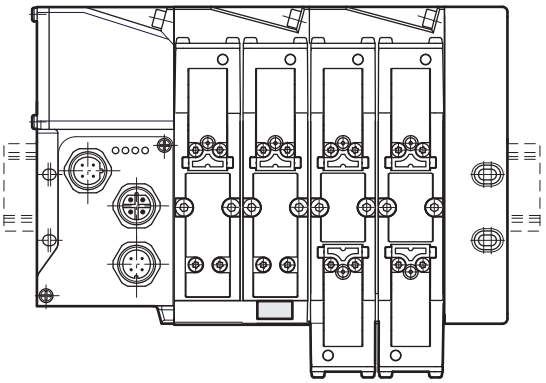

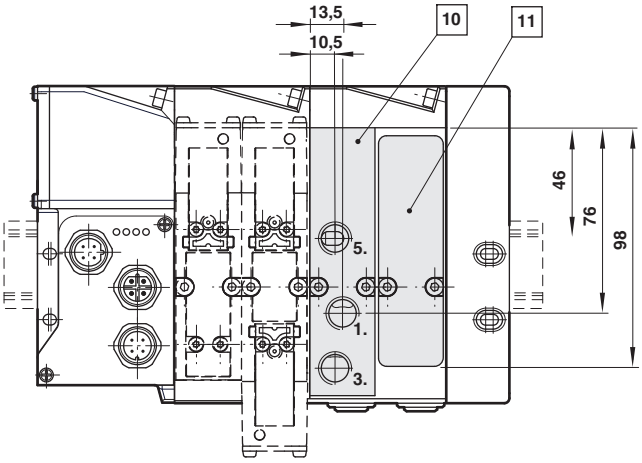

9	**Single valve shut-off plate**
10	**Intermediate supply/exhaust manifold (ISEM)**
11	**Blanking plate**

Our policy is one of continued research and development. We therefore reserve the right to amend, without notice, the specifications given in this document.

Multi pressure configurations

A

Blanking disk kit	Description
V70522-K00	Suitable for ports 1, 3 and 5

B

Intermediate supply/exhaust manifold (ISEM)	Description
VS2672902-BG00	G 1/4
VS2672902-RG00	1/4 NPT

C

Sandwich plate with additional port 1	Description
VS2672928-KG00	G 1/4
VS2672929-KG00	1/4 NPT

Dual pressure

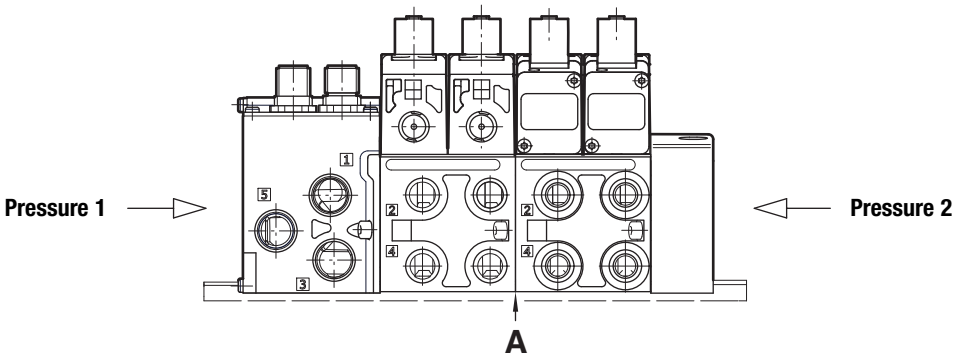

Multi pressure

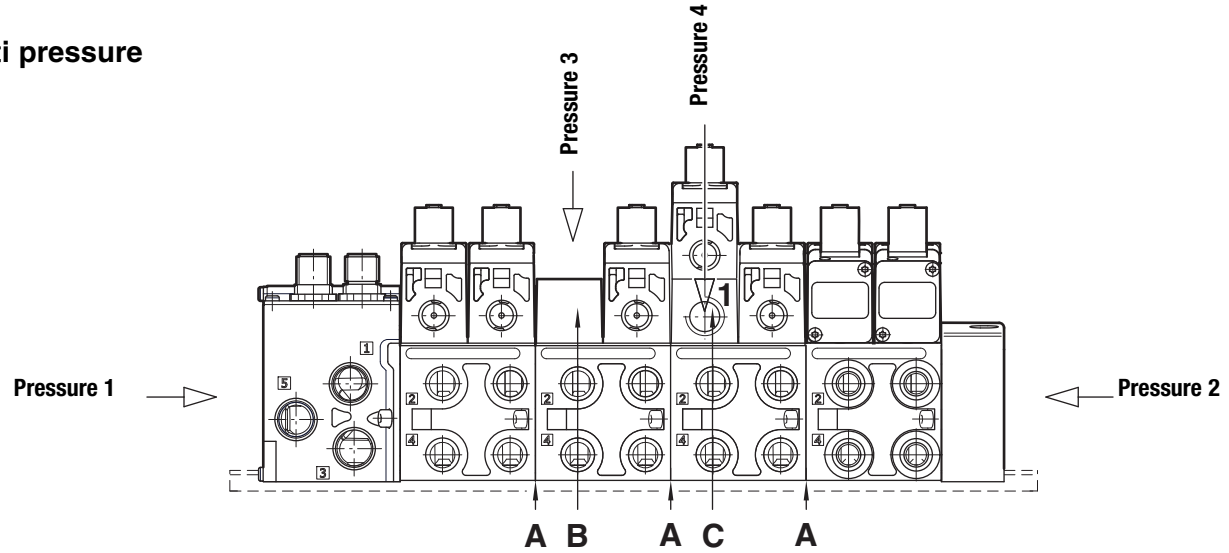

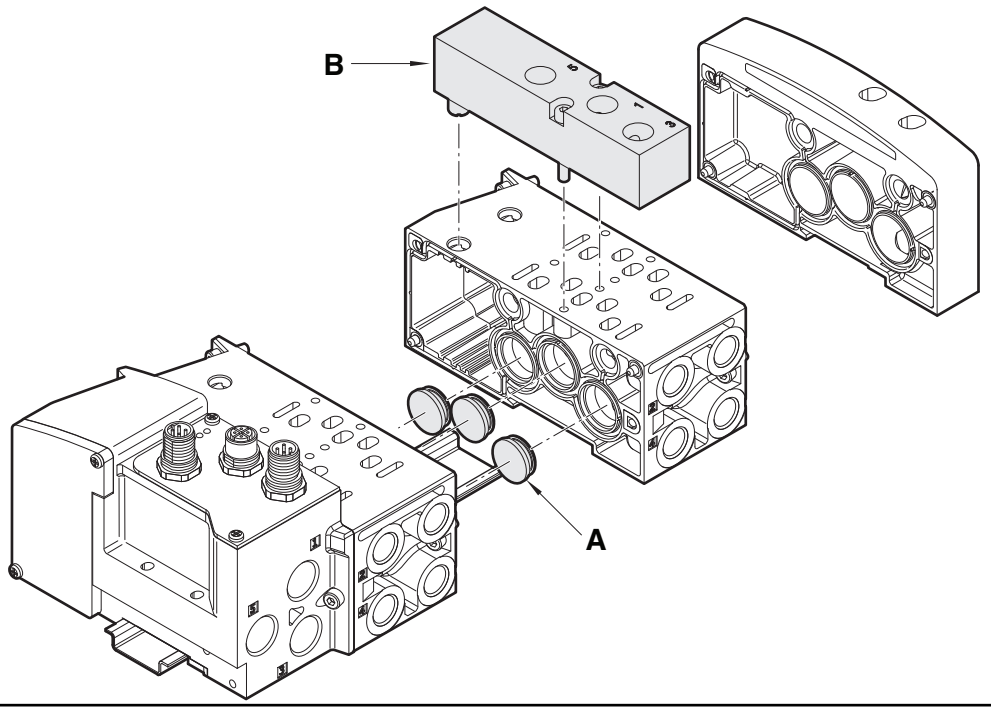

Our policy is one of continued research and development. We therefore reserve the right to amend, without notice, the specifications given in this document.

End plate with X2x interface

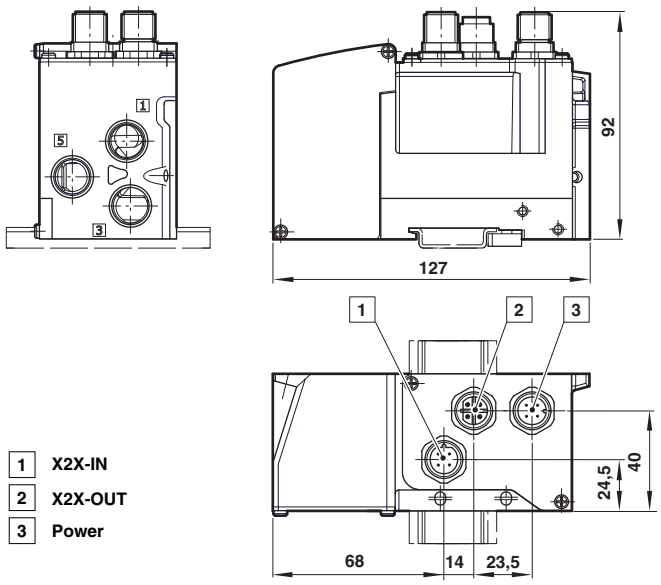

1 X2X-IN
2 X2X-OUT
3 Power

Power connector:
M12, 4 pin (A coded)

Connector pins

Pin no.	Function	Tolerance	Max. current
1	24 VB logic circuit supply	±25%	100 mA
2	24 V valves	–	*1)
3	0 V	–	–
4	Earth	–	–

*1) Imax = 10 mA + n*60 mA
n = number of energized solenoids

Connector pins

Bus connector, X2X-IN
4 pin (B coded)

Pin no.	Function
1	X2X +
2	X2X
3	X2X ⊥
4	X2X\

Female

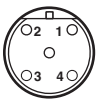

Bus connector (female), X2X-OUT
4 pin (B coded)

Pin no.	Function
1	X2X +
2	X2X
3	X2X ⊥
4	X2X\

Power supply

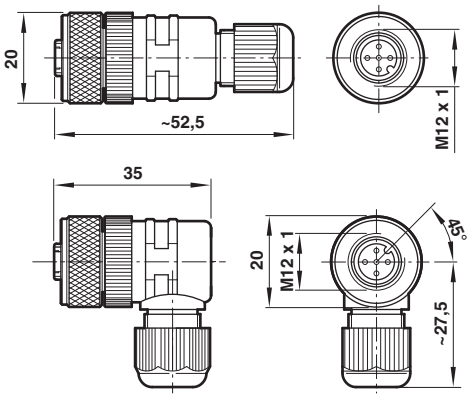

Connector, straight
M12 x 1, 5 pin, female, A coded
Model: 0252563

Connector, 90°
M12 x 1, 5 pin, female, A coded
Model: 0252543

Connector, 90°
M12 x 1, 5 pin, female, A coded with 5 m cable
Model: 0250081

M12 x 1, 5 pin, female, A coded with 10 m cable
Model: 0250472

BUS connectors

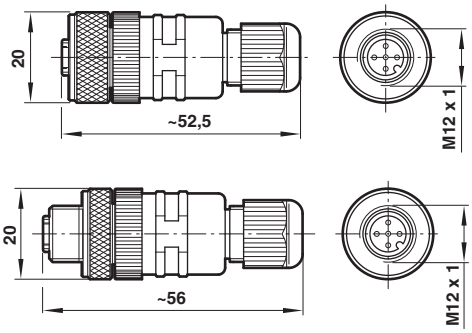

Connector, straight
X2X-LINK (input)
M12 x 1, female 5 pin, B coded
Model: VE2DPCRS-CN05S

Connector, straight
X2X-LINK (output)
M12 x 1, 5 pin B coded
Model: VE2DPCRS-CN05P

Accessories

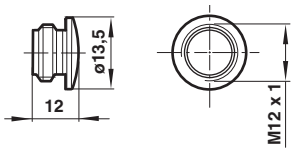

Protection cap
For unused X2X-LINK (output)
M12 x 1,
Model: 0252069

Our policy is one of continued research and development. We therefore reserve the right to amend, without notice, the specifications given in this document.

Worksheet VS26M Series (Please mark the corresponding boxes and fax the sheet to Norgren customer service)

		G	S	Station 1	2	3	4	5	6	7	8	9	10	11	12	13	14	15	16	17	18	19	20
Valves G = Glandless spool & sleeve S = softseal spool Please enter corresponding letter in the boxes	2x2/2 Sol/Spring NC		X																				
	2x2/2 Sol/Spring NO		X																				
	2x2/2 Sol/Spring NO/NC		X																				
	2x3/2 Sol/Spring NC		X																				
	2x3/2 Sol/Spring NO (5/3 COP)		X																				
	2x3/2 Sol/Spring NO/NC		X																				
	5/2 Sol/Spring	X	X																				
	5/2 Sol/Sol	X	X																				
	5/2 Sol (priority side 14)/Sol	X																					
	5/3 APB Sol/Sol	X	X																				
	5/3 COE Sol/Sol	X	X																				
Base accessories (optional)	Intermediate supply/Exhaust module G1/4																						
	Intermediate supply/Exhaust module NPTF1/4																						
	Blanking plate																						
Sandwich plates (optional)	Pressure regulator, port 1																						
	Pressure regulator, port 2																						
	Pressure regulator, port 4																						
	Pressure regulator, ports 2 + 4																						
	Pressure regulator, ports 3 + 5																						
	Sandwich plate with additional pressure port 1 (G1/4)																						
	Sandwich plate with additional pressure port 1 (NPTF1/4)																						
Sub-base port size	G1/4																						
	1/4 NPT																						
	PIF10 mm																						
	PIF8 mm																						
	PIF3/8																						

Soft start dump valve *1)																					
Blanking discs (optional)	Port 1																				
	Port 3																				
	Port 5																				

*1) For use on even stations only

Part no of configured valve island:

V S 26 M __ __ __ __ __ __ __

(This line will be filled out by Norgren)

In case of repeat order, please indicate only this number.

Customer: _____

Contact: _____

Phone: _____

Fax: _____

Order no.: _____

Quantity: _____

Date: _____

Additional accessories / Notes:

_____

_____

_____

_____

_____

_____

_____

_____

_____

_____

Pilot supply
- ❑ Internal
- ❑ External
- ❑ Mixed (Please specify in notes)

Manual Override
- ❑ Push only
- ❑ Push & turn
- ❑ Extended, push only
- ❑ Mixed (Please specify in notes)

End plate kit
- ❑ G3/8
- ❑ 3/8 NPTF

Accessories
- ❑ Manual override set-up kit: quantity: ____

Power supply
- ❑ Wireable connector, straight
- ❑ Wireable connector, 90°
- ❑ Connector, 90° with 5 m cable length
- ❑ Connector, 90° with 10 m cable length

BUS connector
- ❑ Straight Connector X2X-LINK connector (output)
- ❑ Straight Connector X2X-LINK female (input)
- ❑ Protection cap X2X-LINK (output)

Our policy is one of continued research and development. We therefore reserve the right to amend, without notice, the specifications given in this document.

Sub-bases and end plates (without PCB's)

including screws and gaskets

A – End plate kit

Model	Description	Ports 1, 3 + 5	Ports 12/14 + 82/84
VS2672507-CGJ0	End plate kit	G3/8	G1/8
VS2672507-SGJ0	End plate kit	NPTF3/8	NPTF1/8

B - Double station modular sub-base

Model	Ports 2 + 4
VS2672502-BGF0	G1/4
VS2672502-RGF0	NPTF1/4
VS2672502-YGF0	PIF10 mm
VS2672502-8GF0	PIF8 mm
VS2672502-2GF0	PIF3/8

C - Single station modular sub-base
Use 2 x single sub-base

Model	Ports 2 + 4
VS2672503-BGF0	G1/4
VS2672503-RGF0	NPTF1/4
VS2672503-YGF0	PIF10 mm
VS2672503-8GF0	PIF8 mm
VS2672503-2GF0	PIF3/8

Electronic components

Model	Position	Description	Quantity per double sub-base
02522810	14	Output board for 2 stations	1

Model		Beschreibung	Quantity per island
VS2672759-KG00	13	X2X-LINK Interface complete (B&R)	1

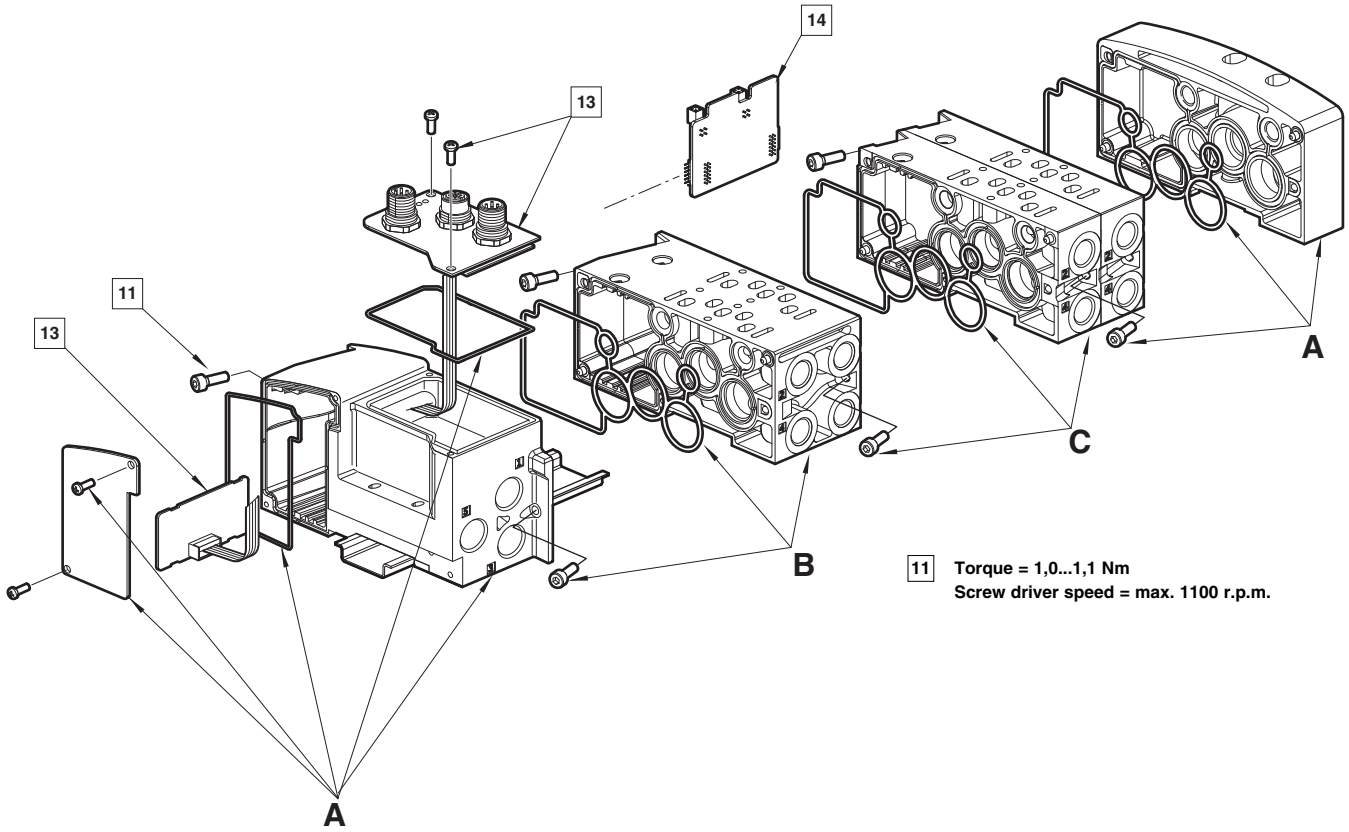

Note: Never plug port 82/84. Plugging this port will cause vales to malfunction.
For detailed assembly instructions, please see maintenance & instruction booklet.

Our policy is one of continued research and development. We therefore reserve the right to amend, without notice, the specifications given in this document.