OLYMPIAN PLUS PLUG-IN SYSTEM

Soft start monitored dump valve

P64S - G1/4, G3/4

P64S

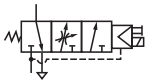

Complete air processing units Olympian Plus plug in design or

Controlled increase of downstream pressure on start up

Monitored dump function

High forward flow capacity

High flow dump facility

Soft start valves allow a controlled increase of pressure onto downstream cylinders / machines offering protection to personnel equipment

The positively driven micro switch ensures a monitored dump function

Note: Turn on system air supply prior to applying signal to operator. Failure to do so may cause valve to continuously exhaust

TECHNICAL DATA

Fluid:
Compressed air

Maximum pressure:
16 bar

Minimum operating pressure:
3 bar

Operating temperature:
-20°C ... 50°C
(Solenoid rating max is 50°C whilst unit max is 80°C. Consult our technical service below +2°C)

Gauge Ports:
Rc1/8

Exhaust ports:
ISO G1/2 with ISO G and Rc main ports, 1/2" PTF with PTF main ports
Typical flow with 6,3 barinlet pressure and outlet pressure drop of 0,5 var
57dm^3/s (P1 ... P2 = Cv 4,2) (P2 ... P3 Cv = 5,6)

Snap pressure:
Full flow when downstream pressure reaches 35% - 60% of inlet pressure

Charge time:
For 2 litre downstream volume and inlet pressure of 6,3 bar, 0,2s minimum, 75 secs. maximum

Solenoid operator:
22 mm, 24V DC, 2W only (no manual overide)

MATERIALS

Body: zinc alloy
Intermediate body: aluminium
Elastomers: synthetic materials
Filter discs: sintered plastic
Internal components: brass / steel / stainless steel
Top plate: aluminium
Exhaust Bonnet: zinc alloy
Yoke: zinc alloy

OPTIONS SELECTOR

P64S-★★C-N1N

Port size	Substitute
1/4"	2
3/8"	3
1/2"	4
3/4"	6

Thread Type	Substitute
PTF	A
ISO Rc Parallel	B
ISO G Parallel	G
No Yoke	N

ACCESSORIES

Series	Wall mounting bracket	Silencer	Gauge 4 ... 25 bar
P64S	74504-50	MB004B (R1/2) MB004A (1/2NPT)	18-013-012 (4 bar) 18-013-013 (10 bar) 18-013-014 (25 bar)

For further information

i PDF CAD

www.norgren.com/info/en6-082

FLOW CHARACTERISTICS

Inlet pressure (bar)

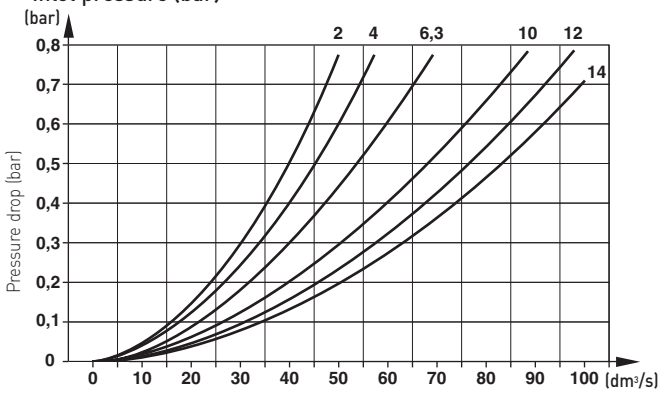

Air flow (dm³/s)

Maximum charge time

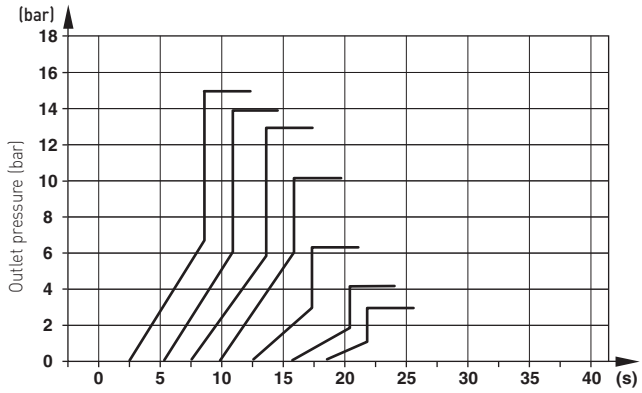

Charge time (s)

SWITCH DETAILS

All electrical connections to be made by a competent licensed electrician
Break - before – Make contact
1 Normally Open / 1 Normally Closed

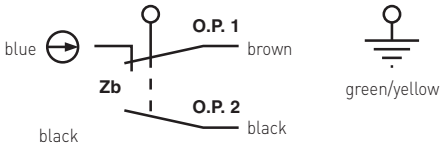

PILZ RELAY

To assist in compliance with the Machinery Directive 89/392/EEC a Pilz circuit should be used.
This requires 2 units.

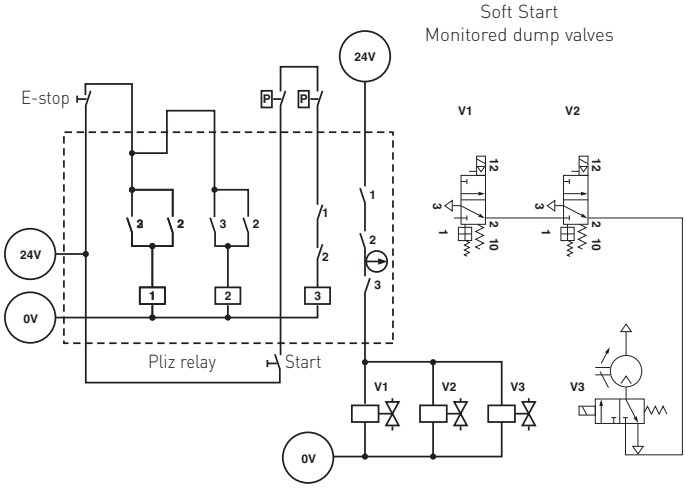
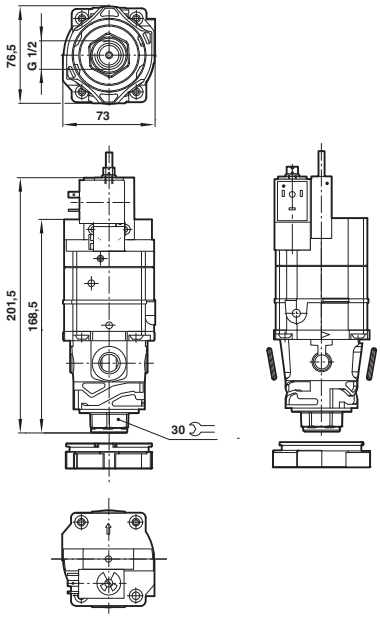
DIMENSIONS